SHOPMASTER GUNMASTER MANUAL

content

1.SPECIFICATION

1.1 TURNING

Distance between centers	300mm
Swing over bed	420mm
Max longitudinal travel	460mm
Max cross travel	200mm
Spindle taper	M.T.4
Travel of tail stock barrel	75 mm
Taper of tail stock barrel	M.T.3
Spindle hole diameter	Φ28mm
Spindle speed	7 steps 160-1360r.p.m.
Longitudinal lead screw threads can be cut	6T.P.I./4mm
Inch thread can be cut	4-120T.P.I./0.2-6mm
Range of automatic feeding	0.002-0.014inch/0.05-0.35mm

1.2 DRILLING & MILLING

Spindle taper	M.T.3
Spindle travel	110mm
Max distance between spindle center and column	--285mm
Max distance between nose and table	306mm
Spindle speed	16 steps 120-3000r.p.m.
Table size	475 X 160mm
Drilling capacity	Φ22mm
End milling capacity	Φ 28mm
Diameter of milling cutter holder	Φ 80mm

1.3 OTHERS

Main motor power	0.55Kw
Motor of drill and mill unit	0.55Kw
Voltage	As customer's requirement
Frequency	As customer's requirement
Net weight	230Kg
Gross weight	275Kg
Overall dimension	1270 X 610 X 955mm
Packing size	1130 X 590 X1110mm

2. APPLICATION

The machine has the functions of turning, milling, drilling and thread cutting. Feed can be controlled automatically and manually, suitable for processing metal, wood and other materials. It is extensively used in job-shops, teaching, scientific research, occupation training, especially in house for repairing household utensils.

3. CONSTRUCTION

The machine consists of bed, headstock, drilling and milling unit, work table, tailstock, motor, etc. The functions of turning, drilling and milling can be made in one machine. Worktable feed can be controlled automatically and manually in longitudinal and cross direction. The drilling-milling head can rotate 180

was designed according to CE standard and very safe. It also can be controlled by personal computer when connecting with it.

4.ELECTRICAL SYSTEM

4.1 COMPOSITION

The system consists of alternating current contactor(-K), red emergency button(-S1), green(-S2), pilot(-HL), microswitch(-S3,-S4,-S5), shift switch, etc. The system has the protection of lose-voltage, and cutting off the current when cover is opened.

4.2 OPERATION

According to the manual, after finish all the preparations, close all the protection instrument, let the red button in original condition. Push the green button, now pilot light which show that alternating contactor has put through the main circuit and the machine enter into working condition. Push the red emergency button, the alternating contactor break down . Now whether the spindle motor or drilling-milling motors are all cut off. When working, if the protection instrument doors are opened the motors also are cut off.

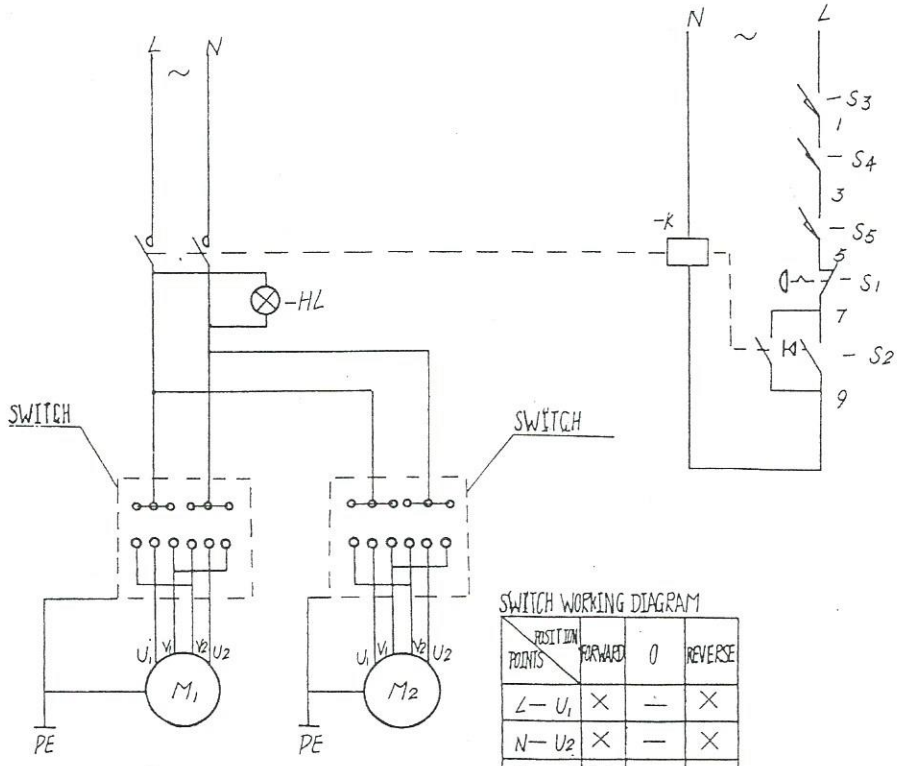

SWITCH WORKING DIAGRAM

POSITION / POINTS	FORWARD	0	REVERSE
L— U1	×	—	×
N— U2	×	—	×
L— V1	×	—	—
N— V2	×	—	—
L— V2	—	—	×
N— V1	—	—	×

THREE PHRASE 220V/380V/440V CIRCUIT

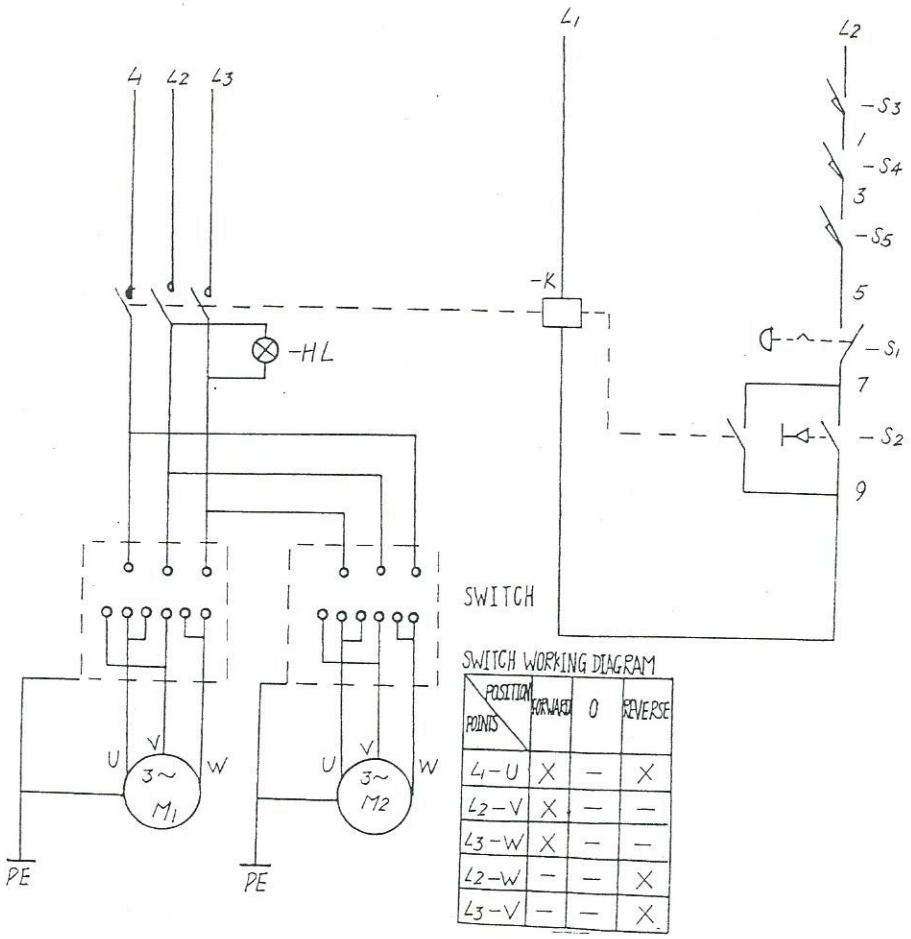

SWITCH WORKING DIAGRAM

POSITION / POINTS	FORWARD	0	REVERSE
L1-U	X	—	X
L2-V	X	—	—
L3-W	X	—	—
L2-W	—	—	X
L3-V	—	—	X

SINGLE PHASE 110V/220V/240V CIRCUIT

4.3 CAUTION

(1)A FUSE AS THE FOLLOWING CHART SPECIFICATIONS MUST BE CONNECTED BETWEEN CURRENT AND THE MACHINE.

(2)THE GROUND TREMINALOF THE MACHINE MUST BE GROUDING PERFECTLY.

(3)BEFORE CUTTING OOF CURRENT OF THE MACHIEN, DON'T OPEN ELECTRIC PROTECTIONS. IF SOME WRONG WITH ELECTRIC SYSEM, PLEASE ASK FOR A REPAIRMAN TO HELP YOU.

CHART4.1 SPECIFICATION OF FUSE

PHASE VOLTAGE	SINGLE PHASE	THREEE PHASE
110V	30A	
220V	20A	10A
380V		7.5A

5.GENERAL DIMENSION

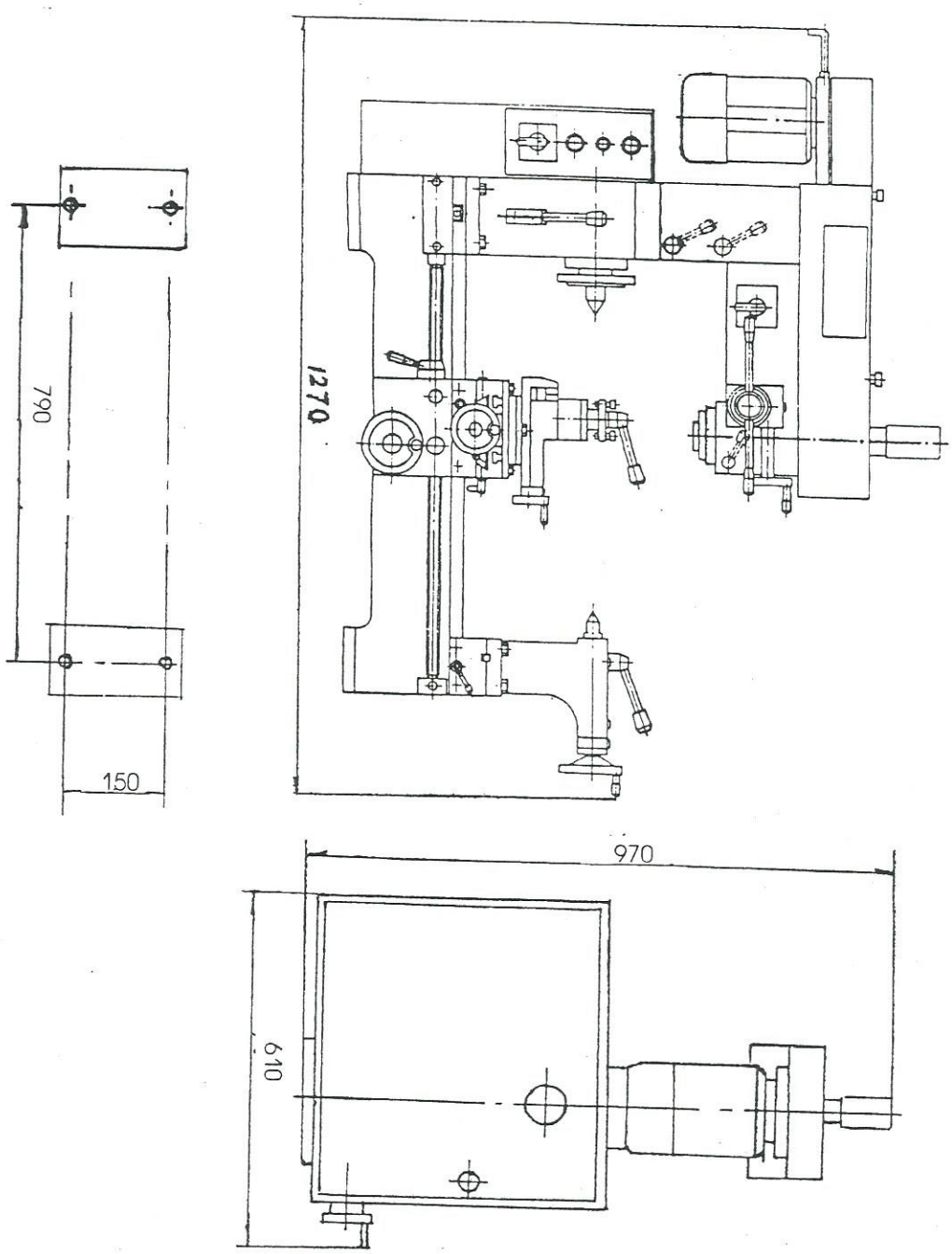

6.INSTALLATION

6.1FOUNDATION

The base of the machine foundation must be solid without noticeable deflection and heavy enough to support the weight of the machine. The floor installation must be fairly level.

If you use our stand, please place the stand in installation position, then make mark in installation hole position, then move the stand, drill hole in the marks to make them fit for the foundation bolts. Cover the foundation bolts, place two adjustable iron spacer in the end of headstock and tailstock seperately. In order to increase the touched square, please stagger the front and back iron spacer. Hereafter, place the stand on the adjustable iron spacers and fix with foundation bolts. Lift the machine on the stand and fix to stand by using the nut and bolts.

6.2 INSTALLATION OF DRILLING AND MILLING HEAD

Firstly, clean turning part and connected part of drilling-milling stock and turning part. As the following figure, place the drilling-milling head on the turning part, then fit brake nut, lever, cork, etc.

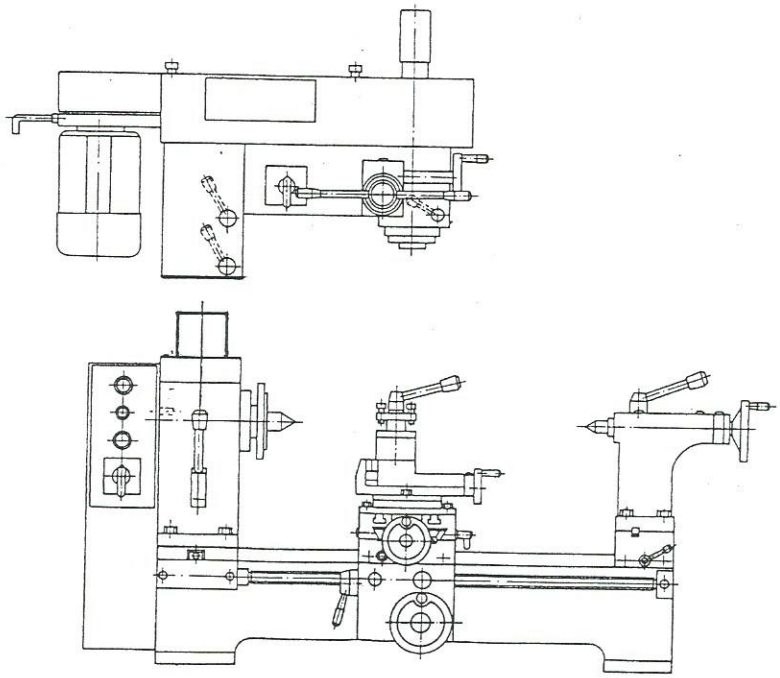

6.3 LIFTING

According to the figure, lift the machine, place spacers on the machine in order to prevent its surfaces being damaged. When lifting, in order to avoid the

position and lock the slide. Place the machine carefully on the base, you can adjust the machine position by iron edge, plug gauge. Finally fit the machine perfectly.

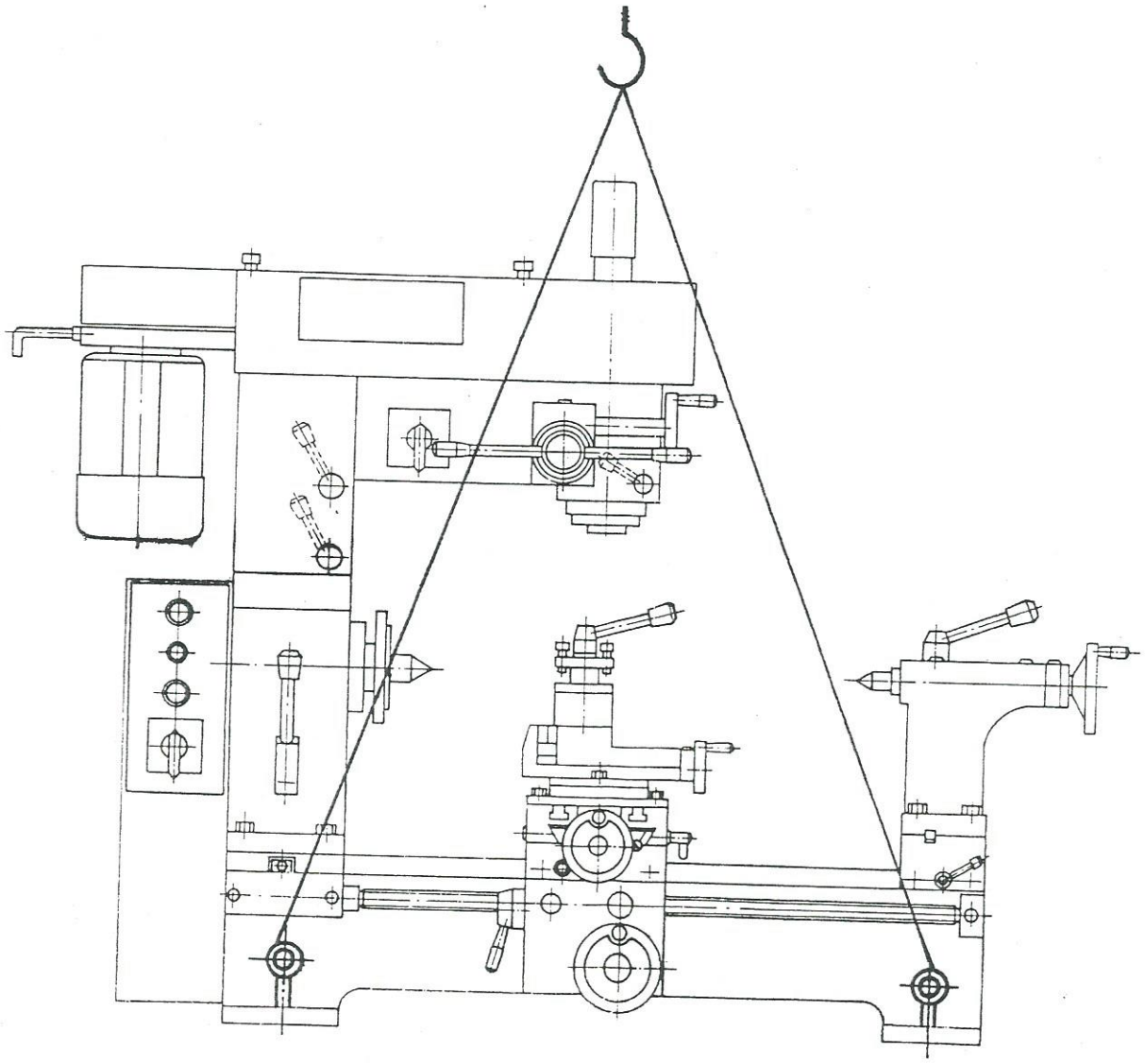

Lubrication Chart:

Item	Name	Location	Method	Lubrication	How Often
1	Head Stock	Gear Bearing	Oil Splash	Machine Oil	Daily
2	Tool Post	Screw Rod	Oil Gun	Machine Oil	Daily
3	Hanging Wheel Box	Hanging Wheel	Oil Gun	Machine Oil	Daily
4	Tailstock	Screw Rod Barrel	Oil Gun	Machine Oil	Daily
5	Lead Screw	Screw	Oil Gun	Machine Oil	Daily
6	Trailer	Cross Feed Screw	Oil Gun	Machine Oil	Daily
7	Drill/mill Headstock	Worm Gear	Oil Gun	Machine Oil	Daily

Figure 7

A good 10 wt motor oil is a satisfactory lubricant for the machine, the bright metal and the gearbox. Use only enough oil for it to become visable in the gear box sight glass. Too much oil will cause the motor to lug.

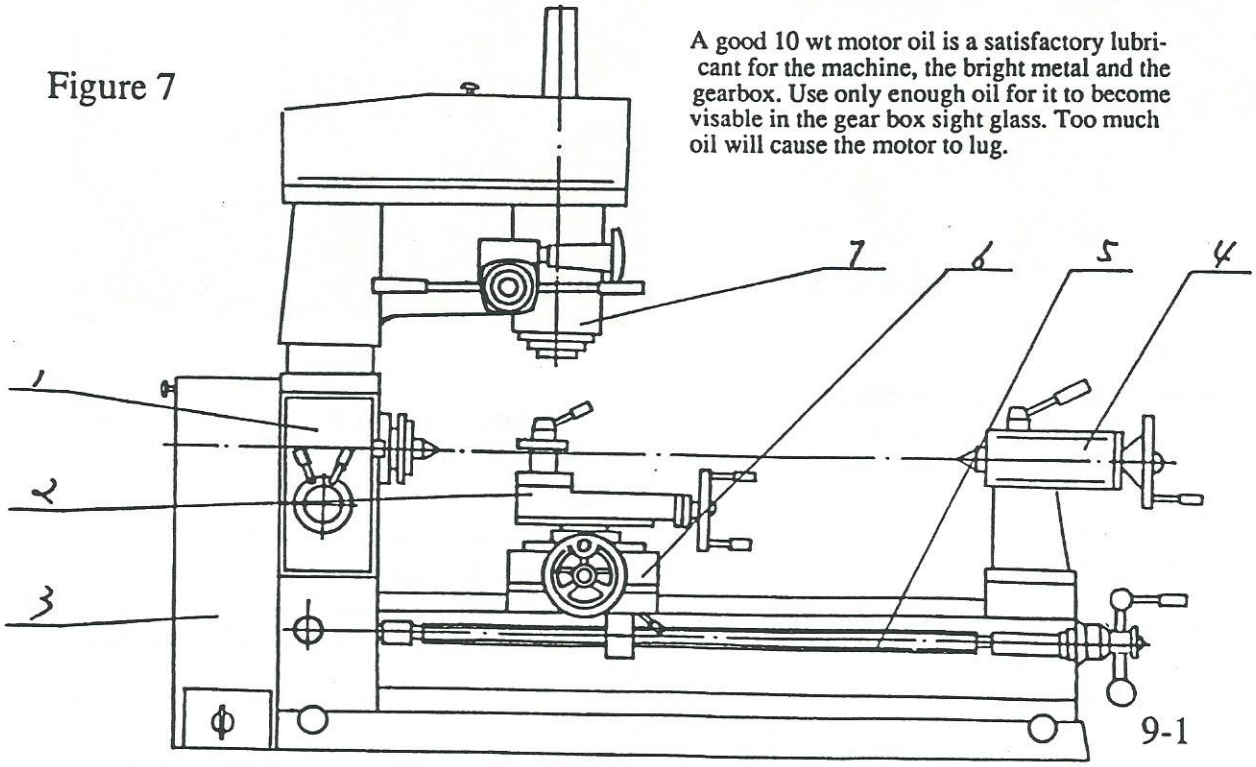

8.OPERATION EXPLANATION

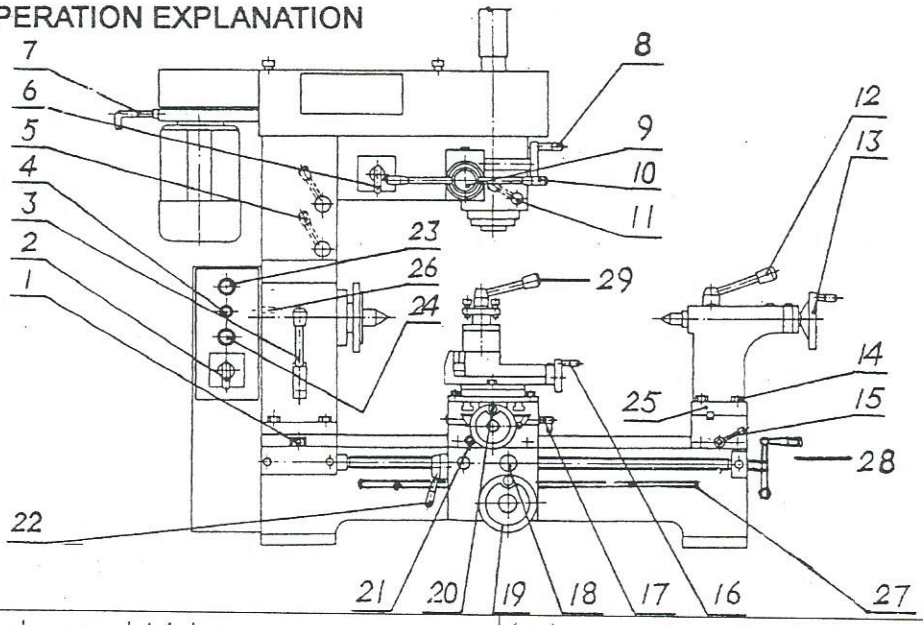

(1)Lead screw clutch lever	(16)Tool post feed hand wheel
(2)Shift switch	(17)Slide lock lever
(3)Change lever	(18)Cross feed clutch lever
(4)Start switch	(19)Longitudinal feed hand wheel
(5)Drilling－milling stock lock lever	(20)Cross feed hand wheel
(6)Drilling－milling shift switch	(21)Saddle lock lever
(7)Drilling－milling belt lock lever	(22)Half nuts lever
(8)Drilling－milling micro feed lever	(23)Pilot
(9)Drilling－milling micro feed clutch lever	(24)Master switch/Emergency switch
(10)Drilling－milling spindle feed lever	(25)Returning screw
(11)Drilling－milling spindle lock lever	(26)Main spindle pulley lock lever
(12)Tail stock barrel lock lever	(27)Rack
(13)Tail stock hand wheel	(28)Ball crank lever
(14)Screw	(29)Tool post lock lever
(15)Tail stock lock lever	

8.1 CAUTION

a BEFORE FAMILIAR WITH THE CONTROL PARTS AND THEIR FUNCTIONS, PLEASE DON'T OPERATE THE MACHINE COMPLETELY.

b CHECK LUBRICATING SURFACES AND SLIDES, TURNING SPARE PARTS REFERING TO LUBRICATING CHART AND USE GREASE TO LUBRICATE.

c AFTER WORKING, YOU SHOLD CUT OFF CURRENT.

d THE MACHINE IS NOT ARMED WITH LIGHT EQUIPMENT. YOU SHOULD SUPPLY ENOUGH LIGHT INSTRUMENT YOUSELF, AND AVOID SHADOW INTERRUTING IN ORDER TO PREVENT THE DANGER HAPPENING BECAUSE OF LACK LIGHTING.

e KEEP CLAMPING THE WORKING PIECE FIRMLY, PREVENT IT FLYING OFF. THE OUTSTANDING PART OF THE PIECE SHOULD NOT BE MORE 80MM. THE RATE OF TH OUTSTANDING PART AND DIAMETER SHOULD BE NOT MORE THAN 4.

STOP.

g WHEN NEEDING TO ADJUST TOOL, THE MACHINE OR WORKING PIECE, YOU PUSH STOP BUTTON TO MAKE THE MACHINE STOP.

8.2 MAIN SPINDLE DRIVING

a Before starting the machine, you should check the tension of belt. The belt should depress about 1/2 inch under normal finger pressure. Too tension of V belt will ruin bearings. The tension of the belts can be adjusted by lever(26).

b Main spindle running, stop, forward and reserve can be realized by shift switch(2). If needing to change main spindle running, please turn the shift switch to middle position, after a moment, then to the opposite side. Or, if turn the lever to another side directly, the direction of main spindle running don't change.

c Loose lever(26), change the belt position in tower pulley, then tighten belt. Now the main spindle can obtain 7 kinds of speed according to the following chart.

THE SPINDLE SPEEDS (○/min)

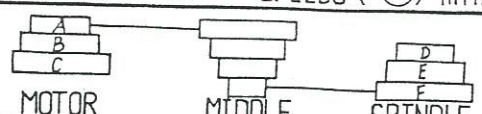

A–F	A–E	A–D	B–F	C–F	B–E	C–D
160	300	375	470	600	870	1360

8.3 DRILLING-MILLING SPINDEL DRIVING

a At first check the protection instrument if effective, then push master switch, pilot light, the machine is awaiting working. Now stop, forward and reserve of drilling-milling spindle can be make by operating the shift switch.

b Drilling-milling spindle feeding can be changed by lever(10), If need micro feeding, pull out drilling-milling clutch lever(9), then operate lever(8) to micro feed.

c The speed of drilling-milling spindle can be made by lever(7):push lever to backward, loose belt, change the belt position on the tower pulley, then push the lever to the front to tighten belt, finally lock lever(7), 16 kinds of speed can be obtained as the following chart.

THE DRILLING-MILLING UNIT SPEEDS (○/min)

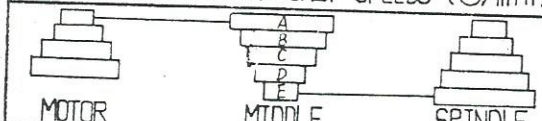

–A	–B	–A	–C	–A	–D	–B	–A
E–	E–	D–	E–	C–	E–	D–	B–
120	200	310	350	400	450	530	600
–B	–C	–B	–D	–C	–D	–C	–D
C–	D–	A–	C–	B–	B–	A–	A–
660	900	1380	1450	1670	2140	2350	3300

8.4 LONGITUDIANL FEED

a HAND FEEDING: lever(1) in left position, half – nut lever(22) in original position, turn the hand wheel(19), now longitudinal hand feeding can be made.

b AUTOMATIC FEEDING: lever(1) in right position, half – nut lever(22) in clutch position, now cross feeding can be made. By changing lever(3) position and gear A B C D, 12 kinds of automatic feeding amount can be obtained as follows. (The left chart is for the inch leadscrew, and the right chart is for the metric leadscrew)

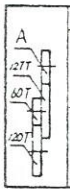

	A	24	30	36	42
mm	I	0.2	0.25	0.30	0.35
	II	0.1	0.125	0.15	0.175
	III	0.05	0.063	0.075	0.088
INCH	I	0.008	0.010	0.012	0.014
	II	0.004	0.005	0.006	0.007
	III	0.002	0.0025	0.003	0.0035

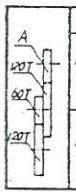

	A	24	30	36	42
mm	I	0.2	0.25	0.30	0.35
	II	0.1	0.125	0.15	0.175
	III	0.05	0.063	0.075	0.088
INCH	I	0.008	0.010	0.012	0.014
	II	0.004	0.005	0.006	0.007
	III	0.002	0.0025	0.003	0.0035

8.5 CROSS FEEDING

a Hand feeding can be made by operating the lever(20) directly.

b Automatic feeding: Lever(1) in right position, half – nut lever(22) in original position. Pull out cross feed clutch lever(18), now cross automatic feeding can go. By changing the gear A B C D, 12 kinds automatic feeding amount can be obtained.

8.6 THREE CUTTING

a Main spindle in low speed, lever(1) in right position, half – nut lever(22) make half – nuts clutch. Now can go to cut thread. Different thread pitch(inch, metric) cutting can go by changing the lever (3) and gear A B C D. (The right chart is for the inch leadscrew, and the left chart is for the metric leadscrew)

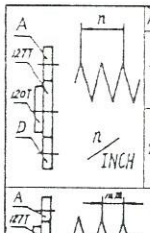

A \ D		24	27	30	33	36	39	42	48	60
72	I	4	4.5	5	/	6	/	7	8	10
	II	8	9	10	11	12	13	14	16	20
	III	16	18	20	22	24	26	28	32	40
24	I	/	/	/	/	18	/	/	24	30
	II	/	27	30	33	36	39	42	48	60
	III	/	54	60	66	72	78	84	96	120

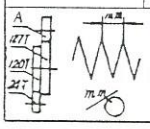

A	36	42	48	60	72
III	0.75	/	1	1.25	1.5
II	1.5	1.75	2	2.5	3
I	3	3.5	4	5	6

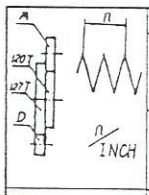

A \ D		24	27	30	33	36	39	42	48	60
72	I	4	4.5	5	/	6	/	7	8	10
	II	8	9	10	11	12	13	14	16	20
	III	16	18	20	22	24	26	28	32	40
24	I	/	/	/	/	18	/	/	24	30
	II	/	27	30	33	36	39	42	48	60
	III	/	54	60	66	72	78	84	96	120

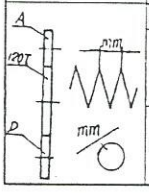

D \ A		24	27	30	36	42	48	60	72
60	I	0.8	/	1	/	/	/	/	/
	II	0.4	0.45	0.5	0.6	0.7	0.8	/	/
	III	0.2	/	0.25	0.3	0.35	0.4	/	0.6
24	I	/	/	2.5	3	3.5	4	5	6
	II	/	/	1.25	1.5	1.75	2	2.5	3
	III	/	/	/	0.75	/	1	1.25	1.5

b CAUTION: IN CUTTING THREAD COURSE, DON'T LEAVE LEVER(1) OFF RIGHT POSITION. WHEN A KIND OF THREAD NEED MANY TIMES

WORKING PIECE. OPERATE THE SHIFT SWITCH(2) TO MAKE MOTOR RUN IN THE OPPOSITE DIRECTION. AFTER FINISHING RETURNING TOOL CONTINUE TO CUT THREADS. DO SO MANY TIMES UP TO FINISHING CUTTING THREADS.

8.7 TAIL STOCK

The tail stock can slides along the bed ways freely and can be locked in any position by the lock lever(15).

Tail stock barrel position can be adjusted by turning the tail stock hand wheel(13), locked by lock lever(12). Before shipment, it is sure that the tail stock center and spindle center are in the same line. If need to use the tail stock center to cut small taper, you should loose the screw(14), adjust the two returning screw(25) to make the deviation between spindle center and tail stock center. Now you can start the work. After finishing proceeding, you should do as the above to move tail stock in original position. When use tail stock to do the external cutting and get a taper, please adjust the returning screw(25) as the above way. Now you can eliminate the taper.

8.8 THREADING DIAL

Threading dial performs the function of indicating the proper time to engage the half-nut so that the tool will enter the same groove of the thread on each successive cutting. Threading dial is marked with lines numbered 1. 2. 3. 4. 5. 6, and a single line is marked on the housing of the threading dial (fixed line). The instruction plate (see the following figure) riveted on the threading dial shows the selection of matching the revolving lines with the fixed line.

When cutting thread, engage the half-nuts at the proper numbers shown on the scale column of the threading dial plate. 1-6 on the scale means the half-nuts can be engage on any of the numbered lines 1.2.3.4.5.6. In the first cutting, if engage the half-nuts when matching the numbered lines with fixed line, you can engage the half-nuts for successive cutting only when matching the numbered lines with the fixed line. 1.4 mean that the half-nuts can be engaged on 1.2 for successive cutting. If the half-nuts engage with the lead screw all the time while cutting the thread, need not to use the threading dial. In this case, after finishing each successive cutting, firstly back the tool and reverse the motor, then move the tool to the last start cutting position and make the next successive cutting.

INDICATOR TABLE

TPI	SCALE	TPI	SCALE	TPI	SCALE	TPI	SCALE
8	14	12	1-6	20	14	32	14
9	1-6	14	14	22	14	40	14
10	14	16	14	24	1-6		
11	14	18	1-6	28	14		

9.CHECK PROBLEMS AND REPAIRING

CAUTION: BEFORE CHECKING, PLEASE TURN OFF THE CURRENT.

9.1Turn on the current, the spindle doesn't run.

a The voltage is not right and the main switch turned off----------please adjust the input voltage and turn on the main switch.

b The fuse is electric box has broken----------please change a new one.

c Wire connector is loosing----------please check and fix it again.

9.2 The motor is too heat or not powerful

a Overloading or working time is too long------please reduce it.

b The voltage is too low----------adjust to correct voltage.

c Poor quality of motor----please change a new one.

d The fuse or wire connector is not good(easily make the motor short circuit----please turn off the current and change a fuse.

e The belt is too tight-----please loose it to suitable position.

9.3Temperature of main spindle bearings is too high.

a Has not enough grease to lubricate-----please fill the oil according to oil gauge.

b The bearing assembly is too tight----------normally, run the spindle by hand easily, otherwise, adjust the spindle back nut.

c High speed turning for long time-----slightly reduce the cutting amount.

9.4Shortage of motive force when the spindle is running.

a The belt is too loose or worn and tore-----please adjust the belt tension to correct position or change a new one.

b The motor is burnt—please change a new one.

c The fuse has broken—please change a new one.

9.5Making small taper when external turning.

a It is not on the same line between the spindle center and the tail stock center—please adjust the tail stock according to the operation manual.

b The moving line of carriage doesn't parallel to the spindle center----please loose the lock screw of head stock and adjust the spindle center to requirement and lock.

9.6 During proceeding, the surface of work piece is very rough.

a The space of the spindle bearing is too big---adjust it to correct position or change a new one.

b The space between the saddle and the gib it is too big----adjust them to correct position.

c The tool is not sharp---please sharpen it.

d The work piece doesn't lock tightly---please lock it tightly.

e The precision of spindle bearing is too bad to wear------please change a new one.

10.MAINTENANCE

Please often keep the machine in good condition and good precision. It is advisable that maintenance is better than repair.

10.1DAYLY MAINTENANCE

a Before using everyday, please pour the oil and lubricate all the moving parts.

b If the spindle temperature is too high or too noisy, please stop the machine and check it in order to keep its precision.

c When the machine is in trouble, please stop to repair it. If you don't do it well, please ask for the local repairman or supplier to help you.

d. It is not allowable to work the machine with too many loads.

c Before leaving the workshop, please clean the working area, unload the work piece, turn off the power, be careful to clean the iron chipping and shavings and dust, pour into the lubricating oil or antirust oil according to the manual.

10.2 Weekly maintenance

a Clean and protect the screw.

b Check all sliding turning surfaces if lack of lubricating, if not, please pour into oil.

10.3 Monthly maintenance

a Adjust all the gib space of the saddle.

b Lubricate the worm gear, half nut bearings in order to prevent wearing.

11. STANDARD ACCESSORIES

Item no.	Item name	Specification	Quantity	Remarks
1	3-jaw chuck	130mm	1	Installed
2	Dead centers	M3	1	
		M4	1	
3	Wedge		1	
4	Tie rod		1	Installed
5	Tie rod washer		1	Installed
6	Tool post wrench		1	
7	Double end wrench	13x16mm	1	
8	Allen wrench	3mm	1	
		4mm	1	
		5mm	1	
		6mm	1	
		8mm	1	
9	"-" screw driver	100x6mm	1	
10	Double gears(m-1)	60/120 gear	1	60/127 inch
		120 /127 gear	1	(metric, inch)
	Gear(m-1)	24 gear	1	(metric, inch)
		27 gear	1	(metric, inch)
		30 gear	1	(metric, inch)
		33 gear	1	(metric, inch)
		36 gear	1	(metric, inch)
		42 gear	1	(metric, inch)
		48 gear	1	(metric, inch)
		60 gear	1	(metric, inch)
		72 gear	1	(metric, inch)
		120 gear	1	(metric, inch)
		39 gear	1	inch

The descriptions and specifications given in the manual are svbject to alteration uithout notice.

12 OPTIONAL ACCESSORIES (ACCORDING TO THE SUPPLY CONTACT)

Item no.	Item name	Specification	Quantity	Remarks
1	Lathe tool		1	
2	Milling cutter holder		1	
3	Reversible thread tapping tools		1	
4	D.C. motor system		1	
5	Machine stand		1	
6	Protection for chuck		1	
7	Protection for lead screw		1	
8	Protection for tool post		1	
9	Protection for drilling and milling		1	
10	Drill chuck	1-13mm	1	
11	Follow rest		1	
12	Steady rest		1	

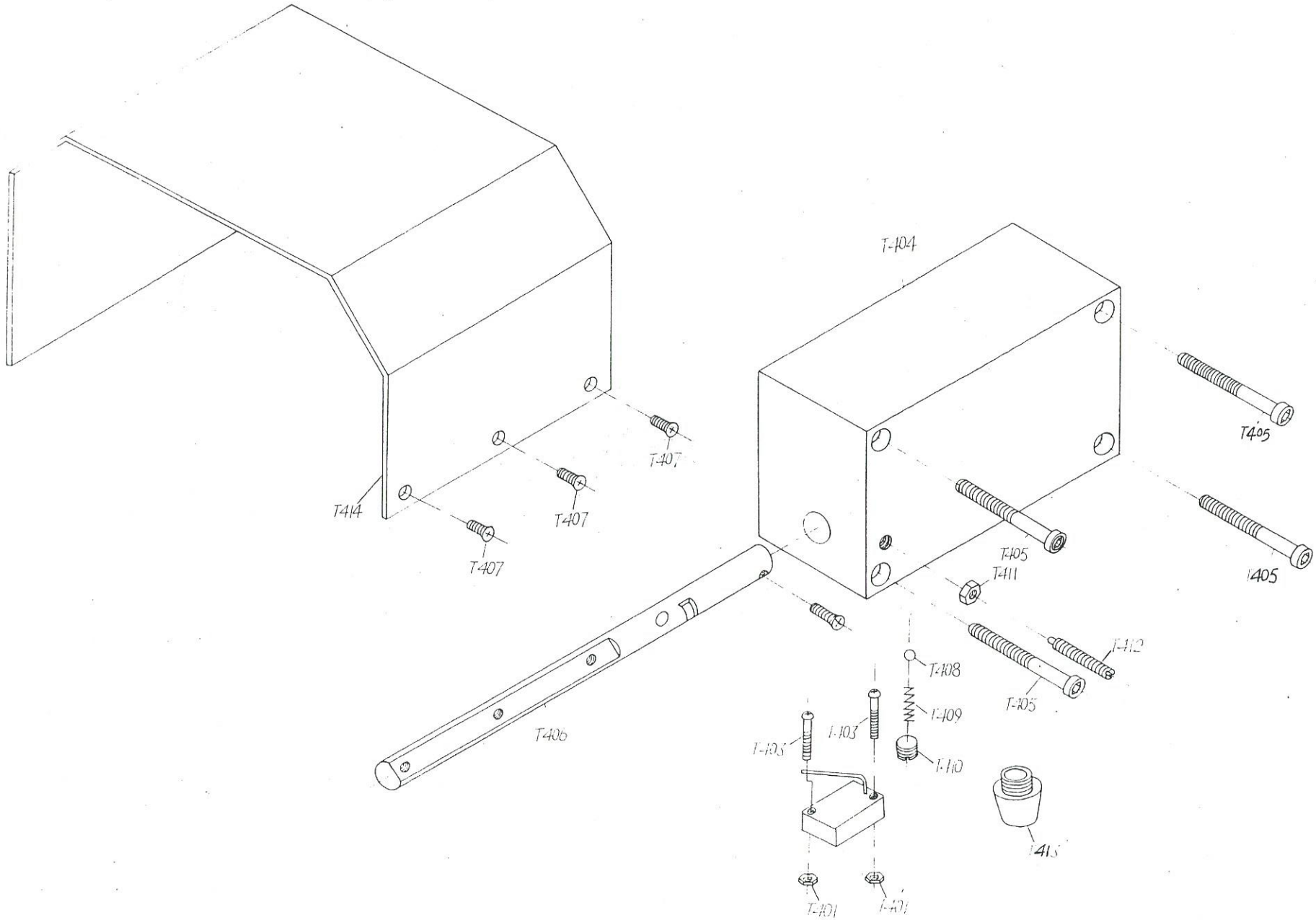
T-404
T405
T405
T-405
T-411
T-412
T-408
T-409
T-410
T-405
T-403
T-403
T-406
T-407
T-407
T-407
T414
T415
T-401
T-401

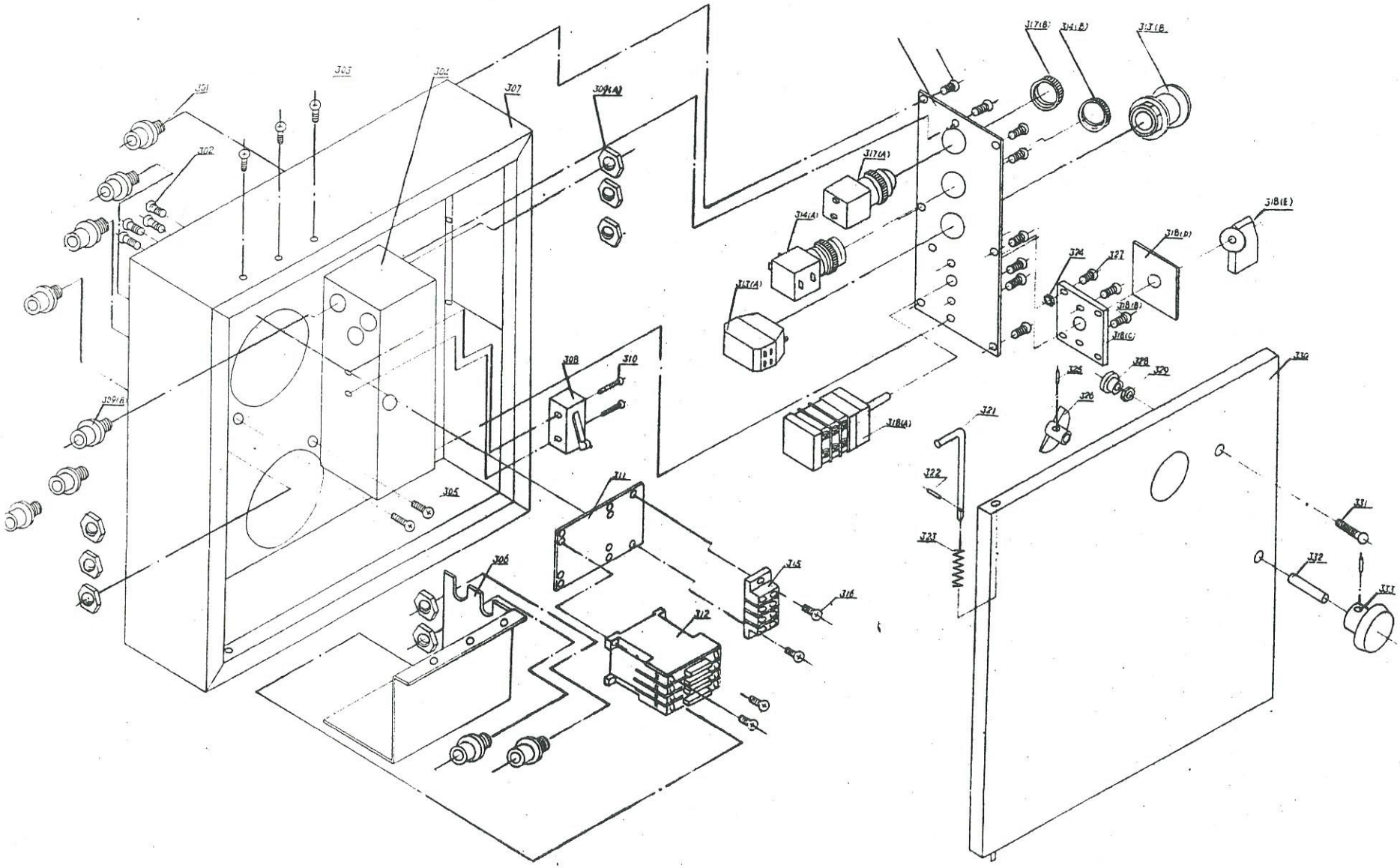
301
302
303
304
305
306
307
308
309(A)
309(B)
310
311
312
313(B)
314(A)
314(B)
315
316
317(A)
317(B)
318(A)
318(B)
318(C)
318(D)
318(E)
319
320
321
322
323
324
325
326
327
328
329
330
331
332
333

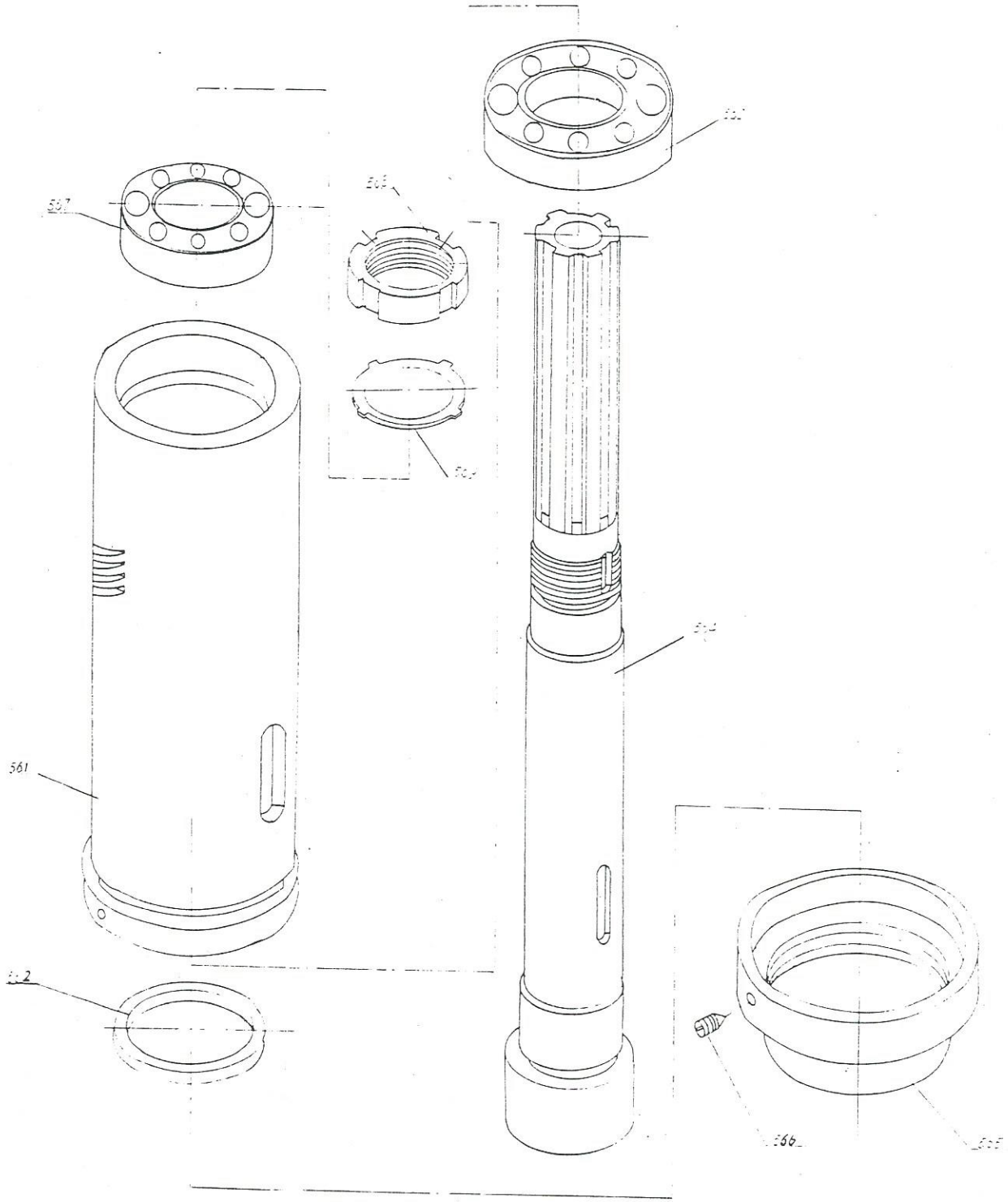
561

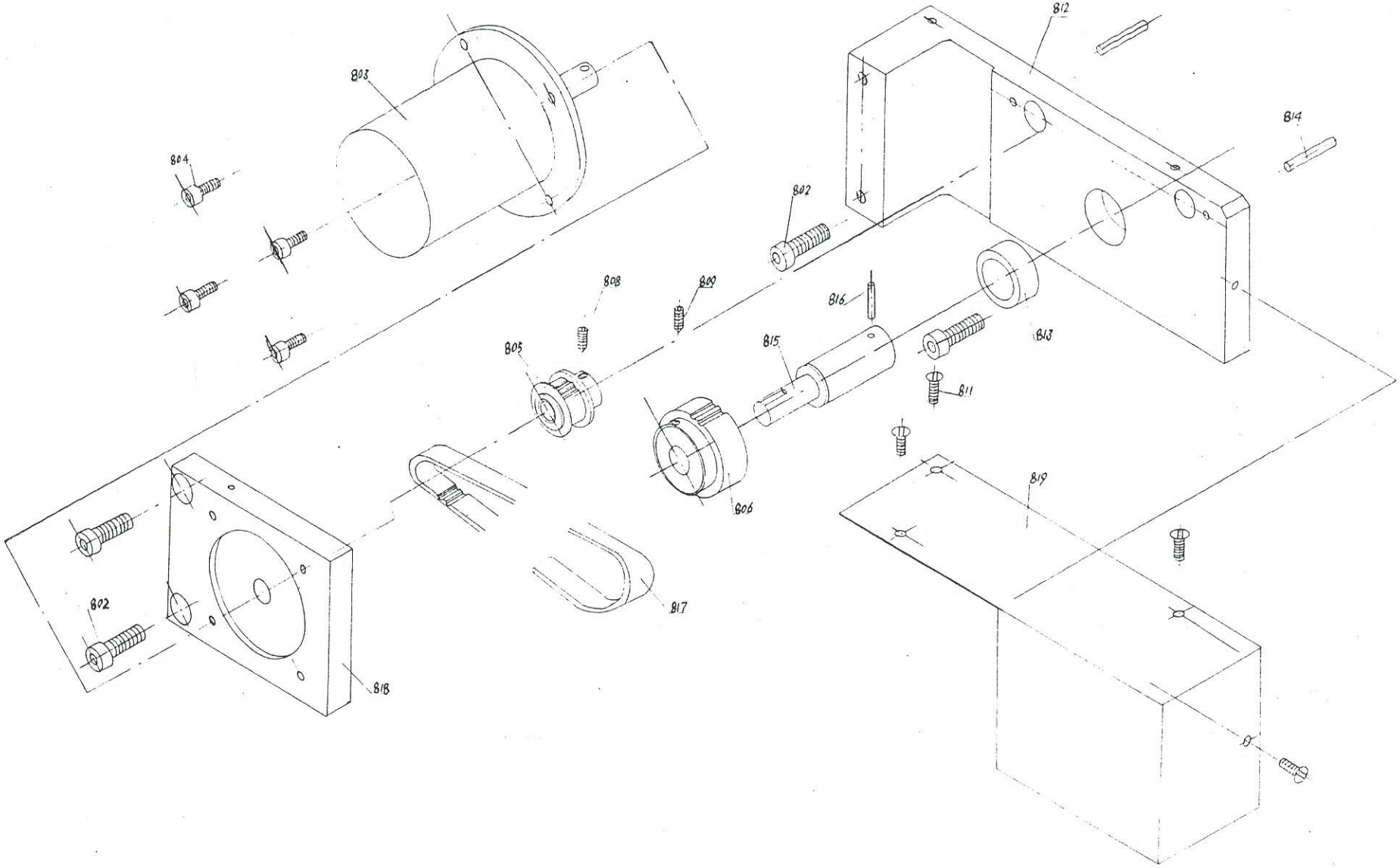
803
804
812
814
802
808
809
816
805
815
813
811
806
819
817
802
818

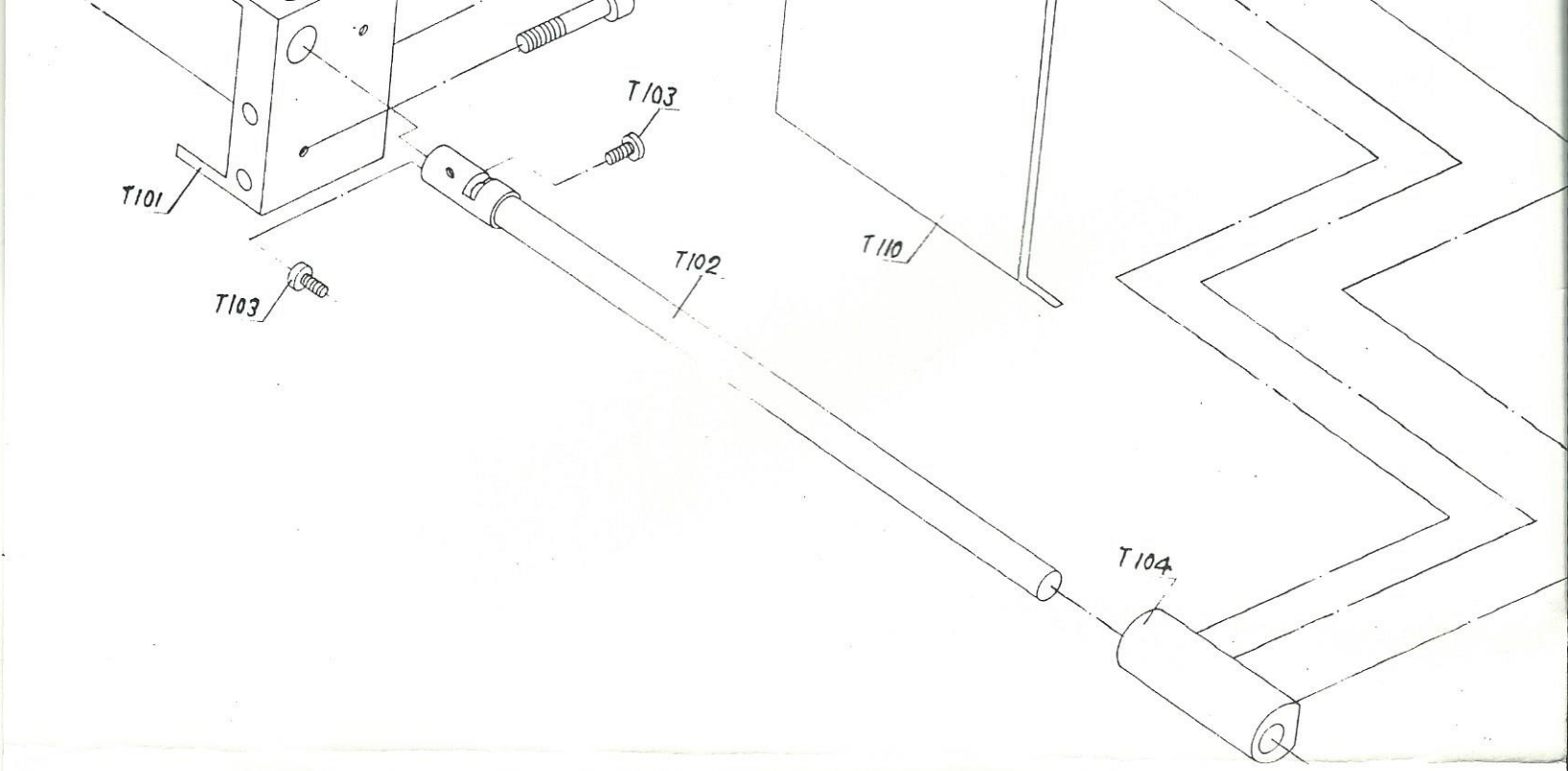
T103
T101
T103
T102
T110
T104

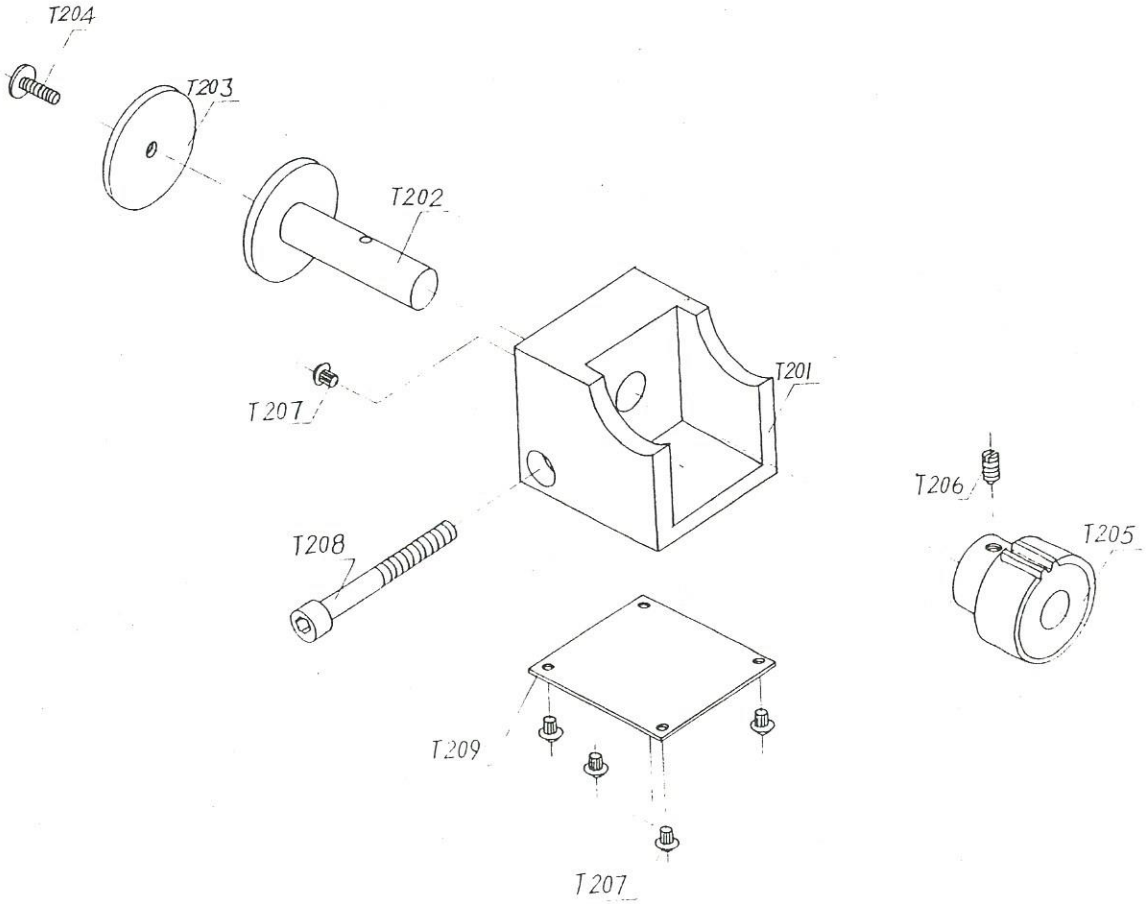
T204
T203
T202
T207
T201
T206
T205
T208
T209
T207

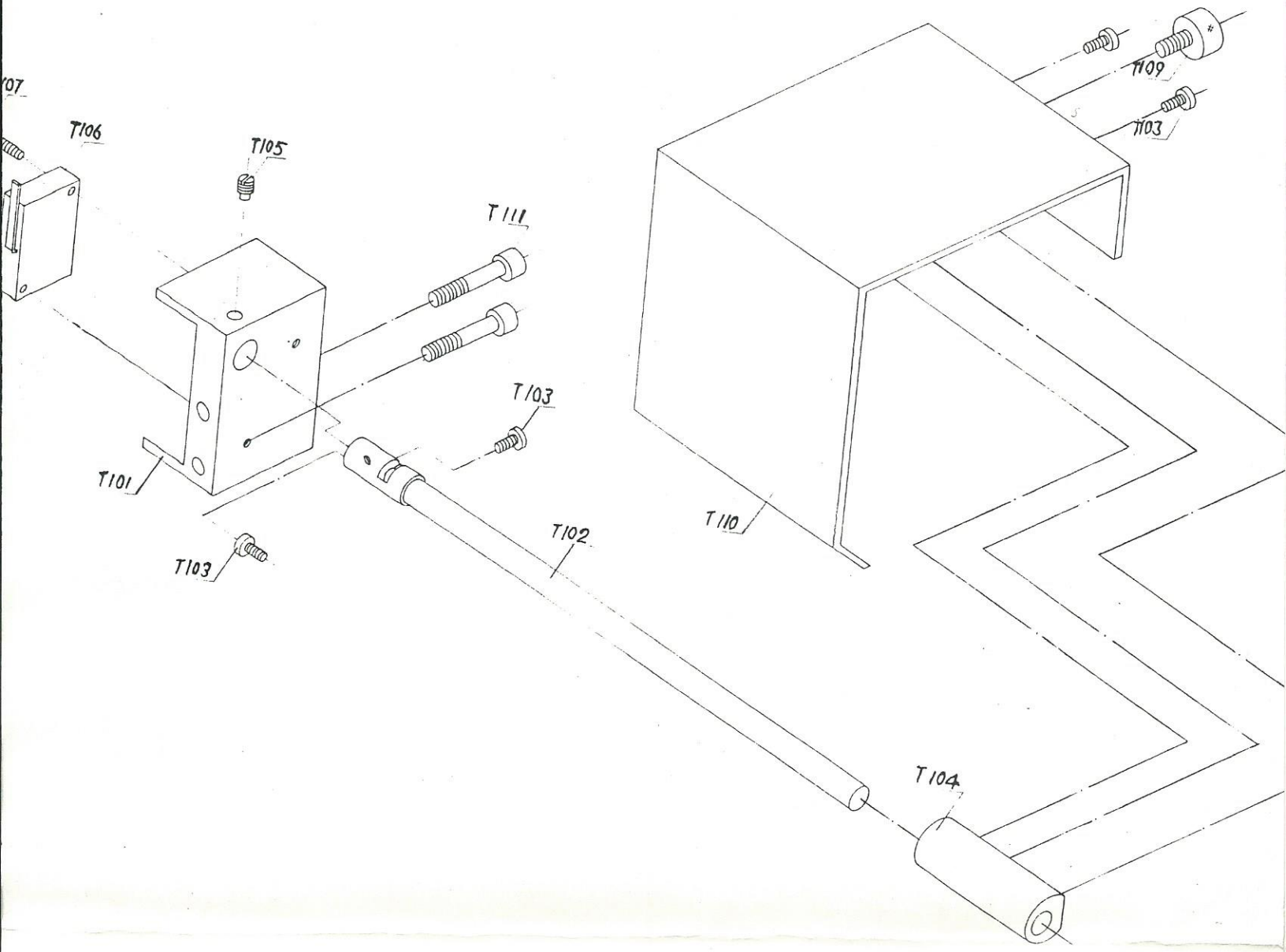
T107
T106
T105
T111
T109
T103
T103
T101
T103
T102
T110
T104

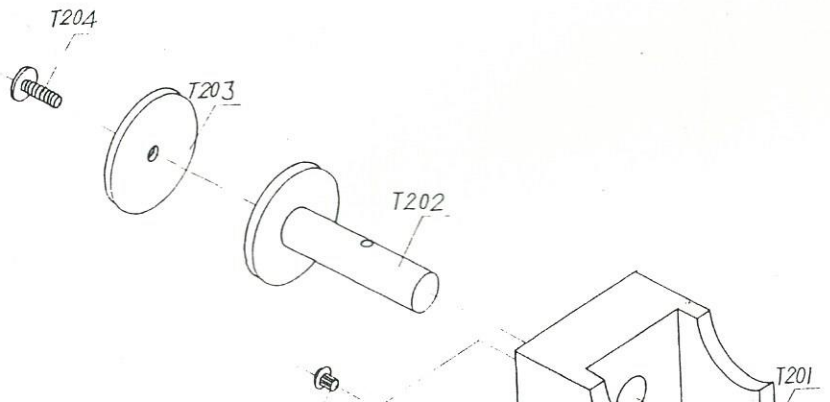
T204
T203
T202
T201

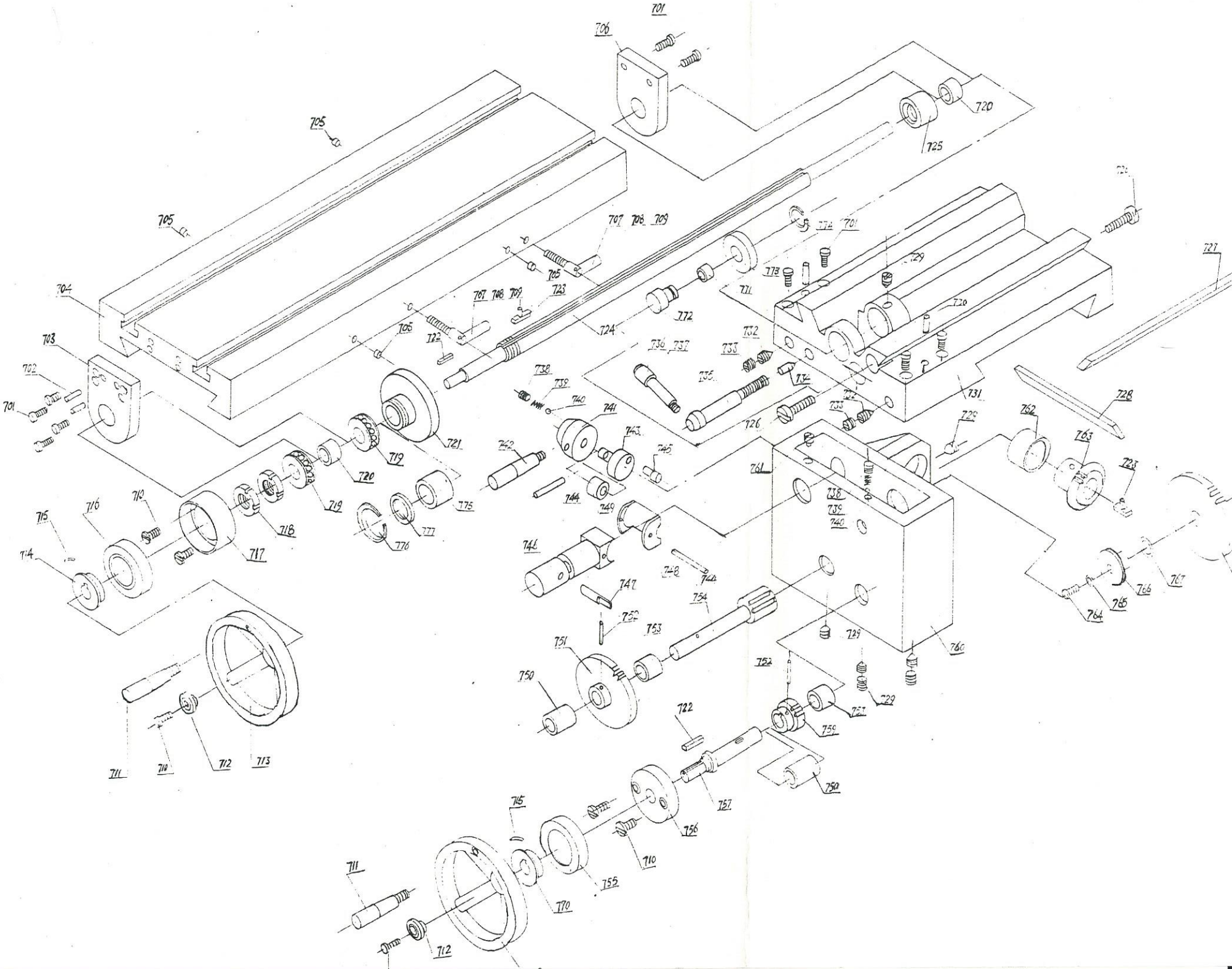
701
702
703
704
705
706
707
708
709
710
711
712
713
714
715
716
717
718
719
720
721
722
723
724
725
726
727
728
729
730
731
732
733
734
735
736
737
738
739
740
741
742
743
744
745
746
747
748
749
750
751
752
753
754
755
756
757
758
759
760
761
762
763
764
765
766
767
770
771
772
773
774
775
776
777

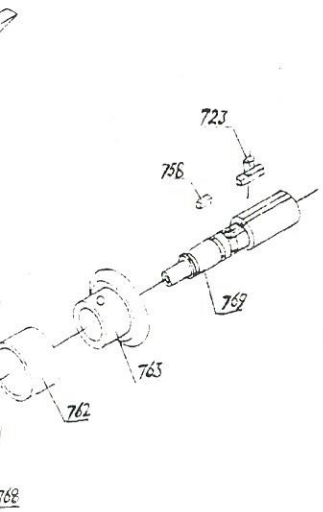
723
756
769
765
762
768

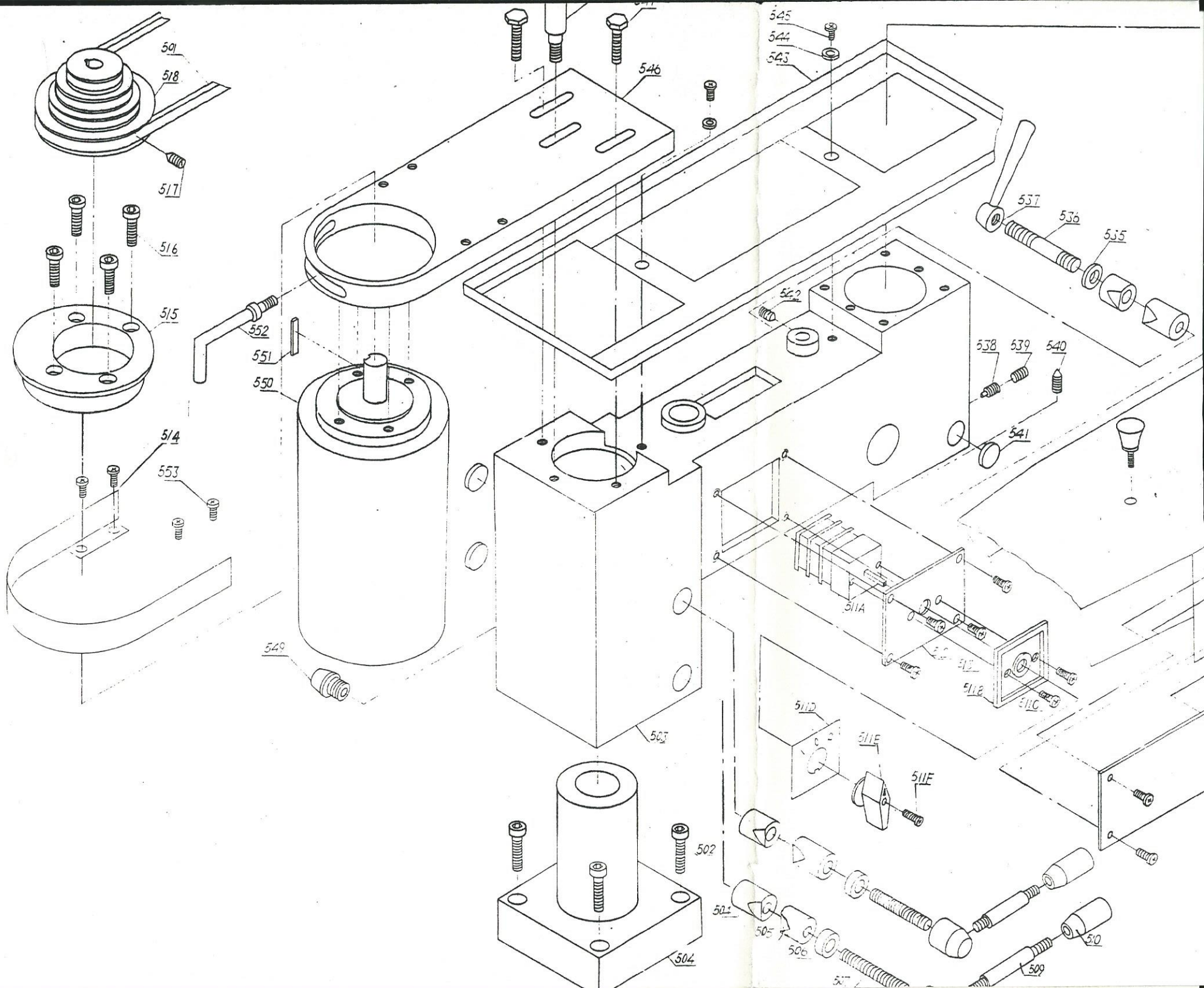
501
518
517
516
515
514
553
552
551
550
549
546
545
544
543
537
536
535
542
538
539
540
541
511A
511B
511C
511D
511E
511F
502
504
503
505
506
507
509
510

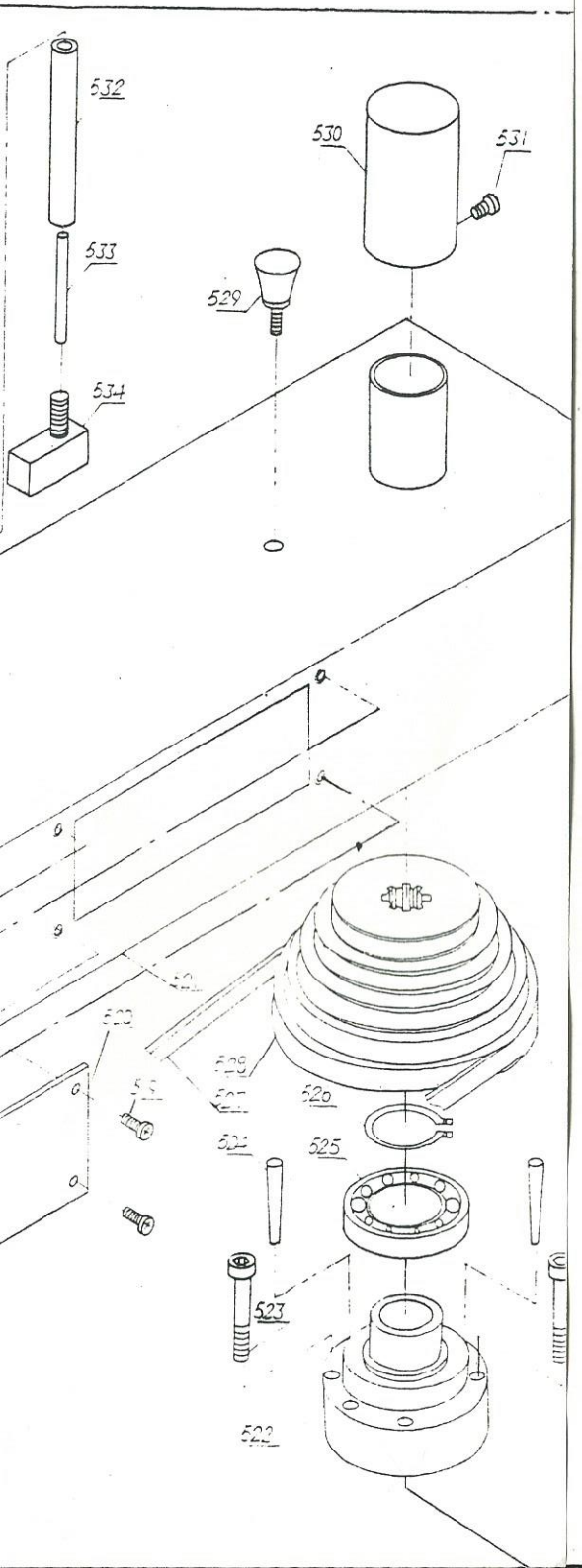
532
530
531
533
529
534
520
525
523
522

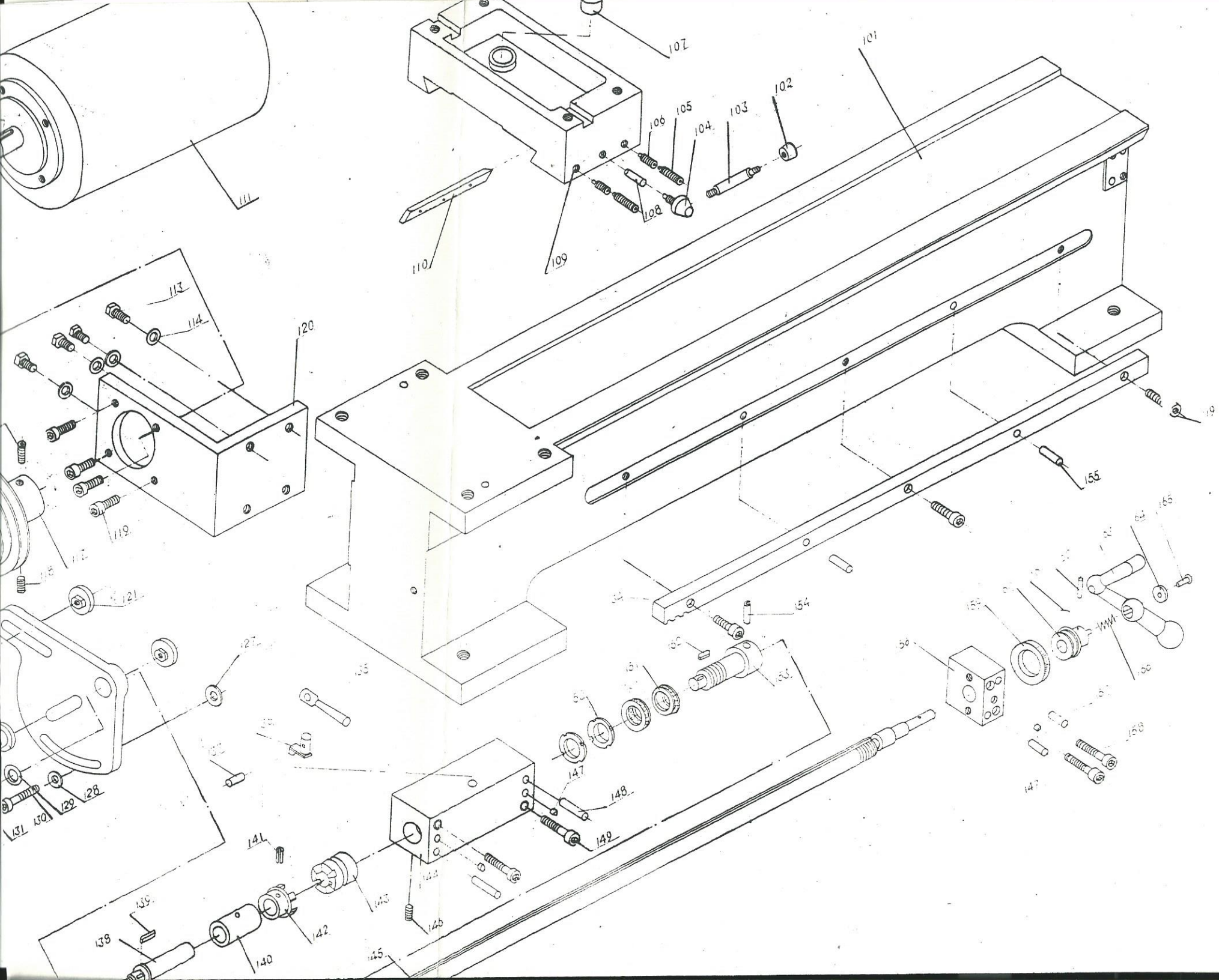
101
102
103
104
105
106
107
108
109
110
111
113
114
119
120
121
127
128
129
130
131
135
138
139
140
141
142
143
144
145
146
147
148
149
154
155
156
157
158
159
160
161
162
163
164
165
166
167
168

112
10
11
24
23
22
21
125
126
127
128
129
130
131
132
133
134

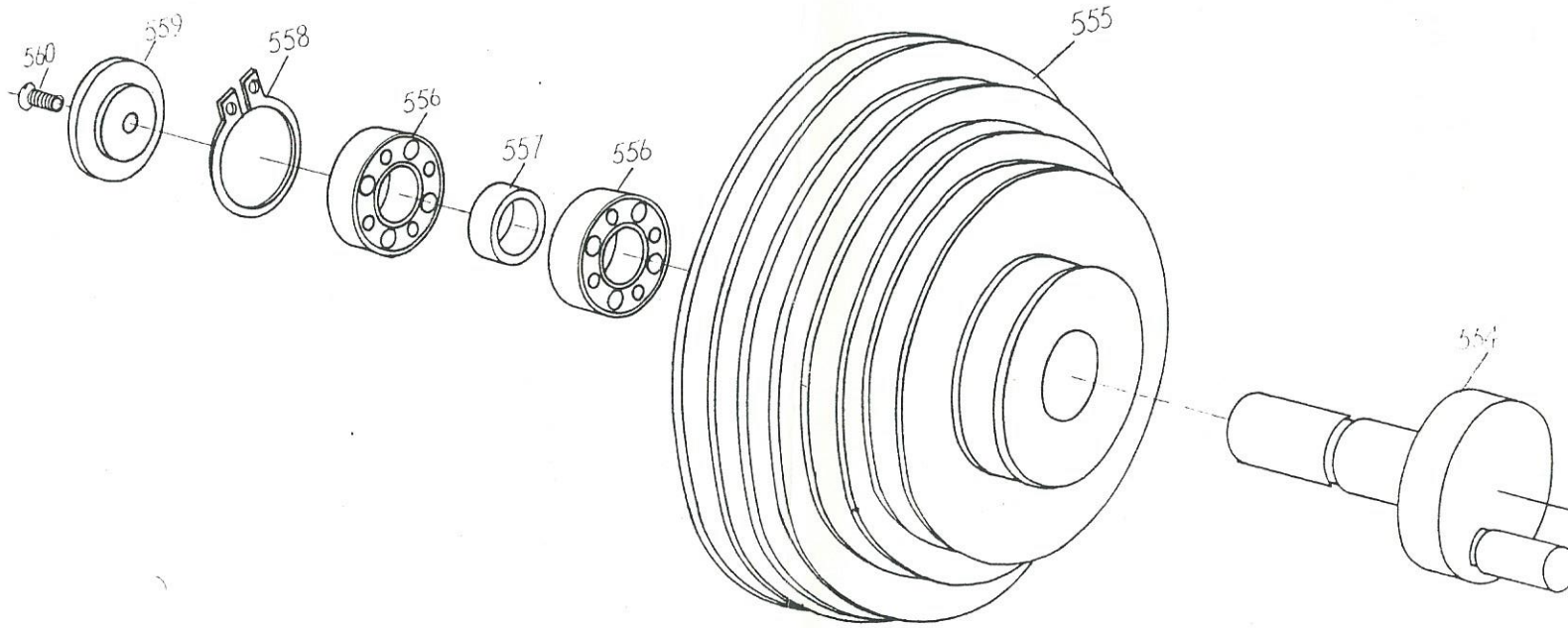
560
559
558
556
557
556
555
554

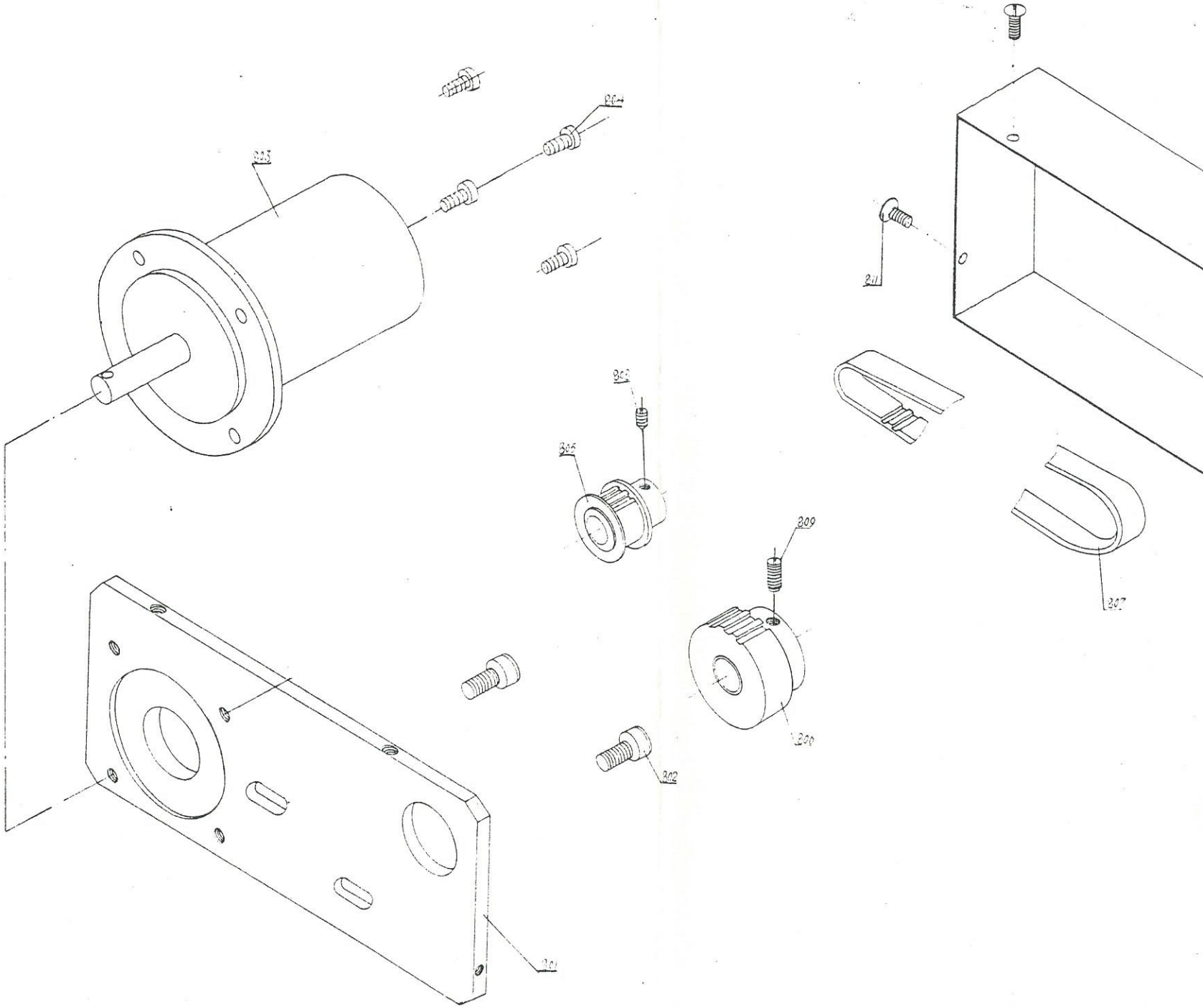
864
863
862
866
809
808
802
801
811
807

25

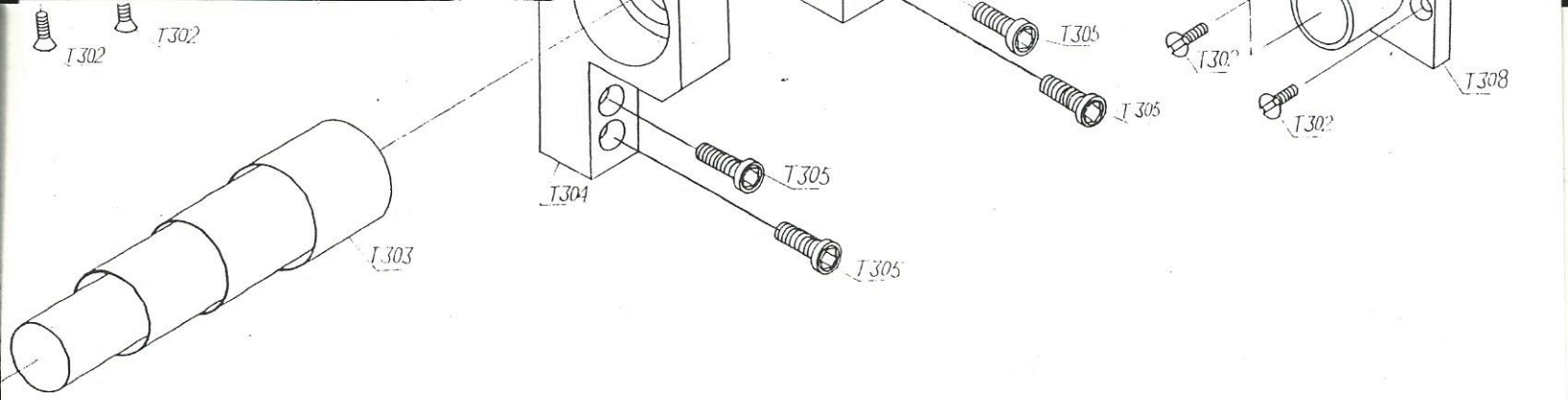
T302
T302
T305
T305
T308
T302
T302
T304
T305
T305
T303

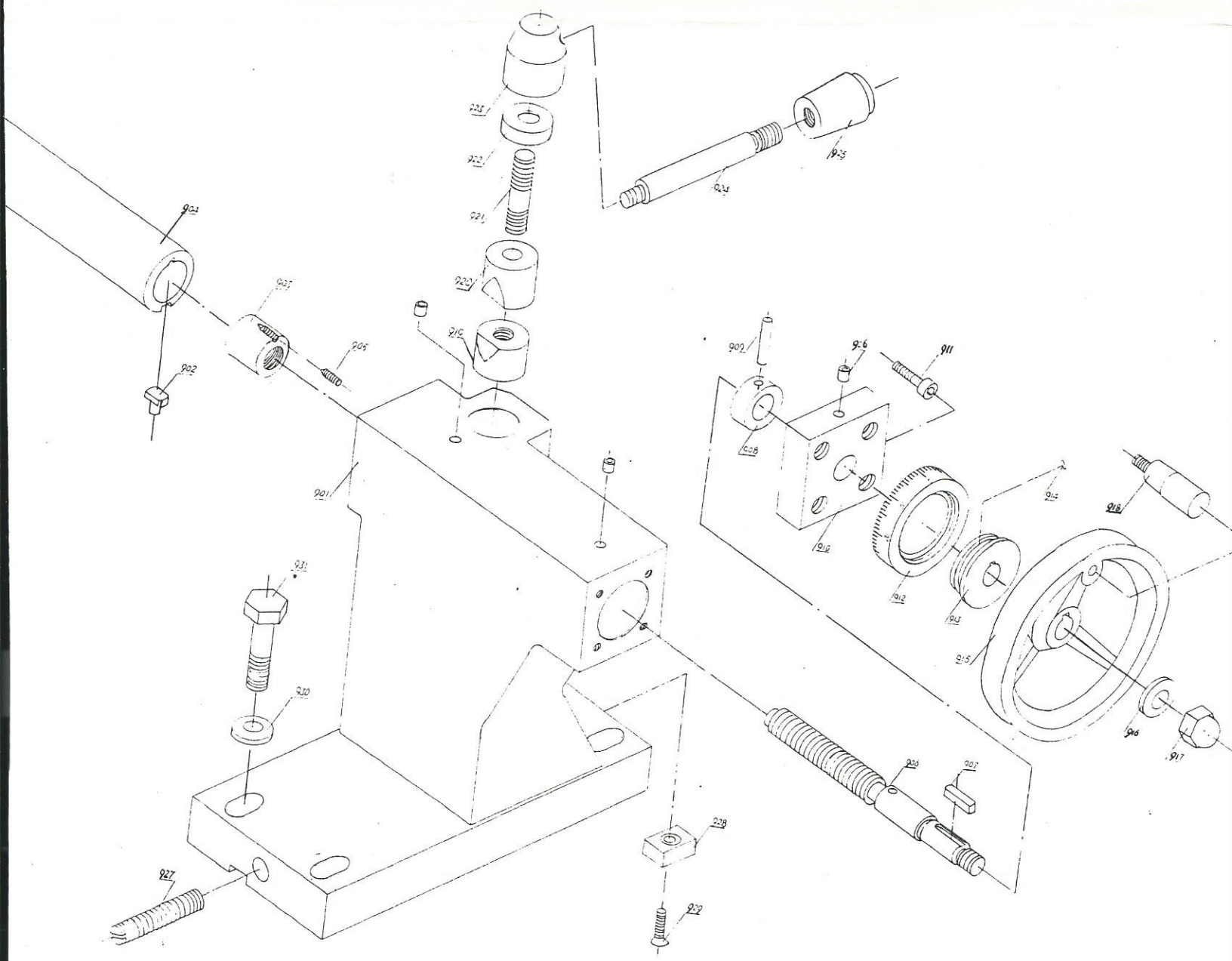
923
922
921
920
919
924
925
921
927
905
902
901
900
926
911
928
912
913
914
918
915
916
917
931
930
929
907
928
927
932

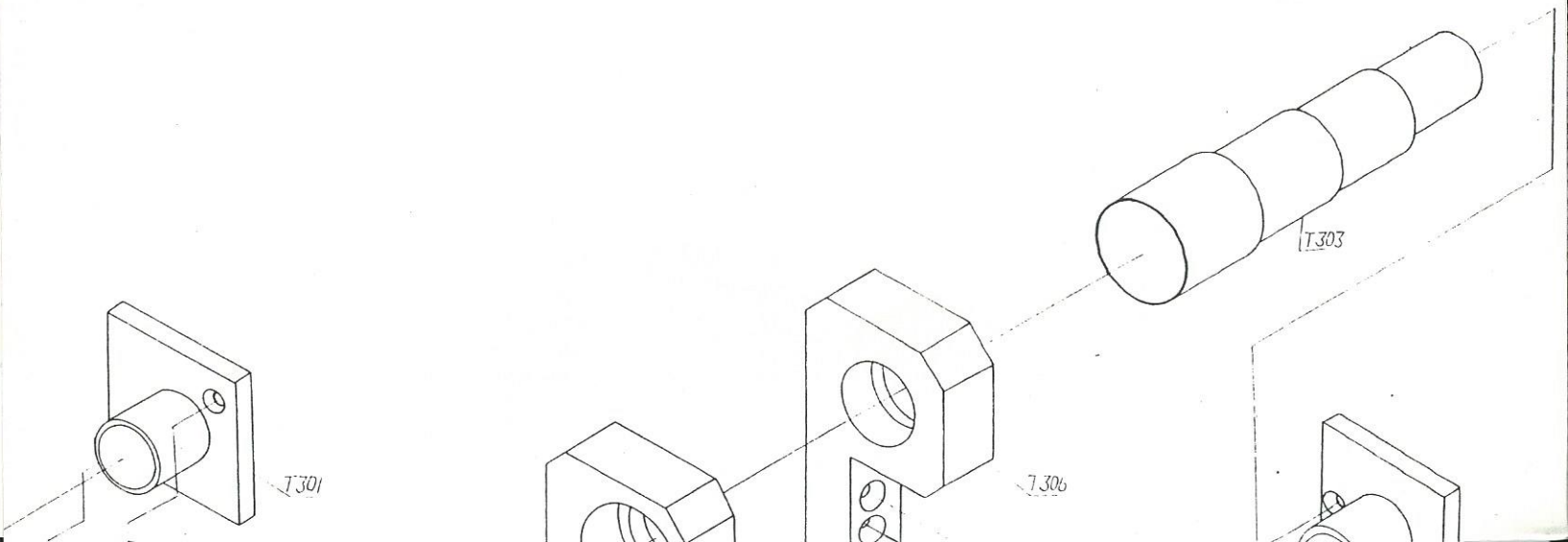
T301
T306
T303

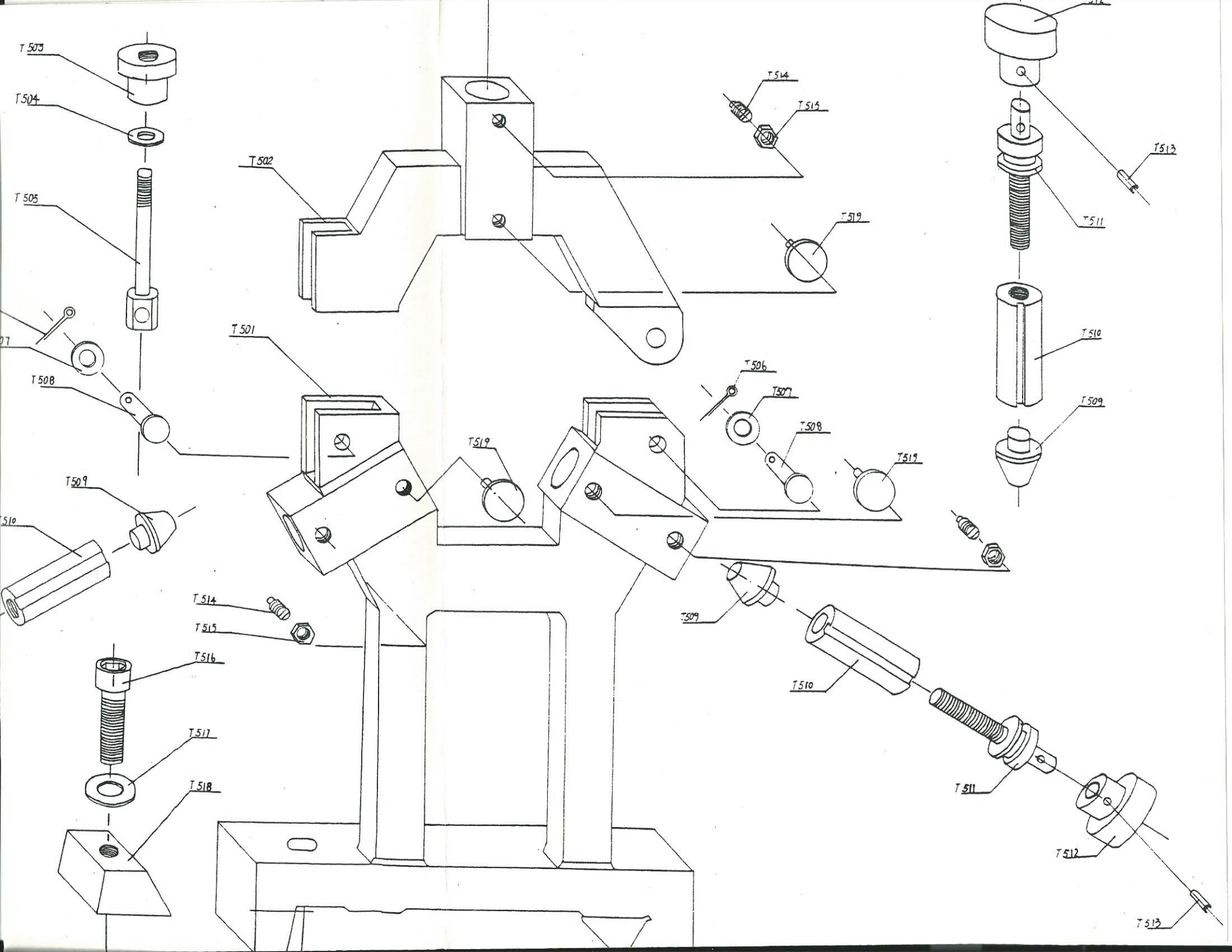
T503
T504
T505
T502
T514
T515
T519
T513
T511
T510
T509
T501
T506
T507
T508
T519
T519
T509
T510
T514
T515
T516
T517
T518
T509
T510
T511
T512
T513

T 506

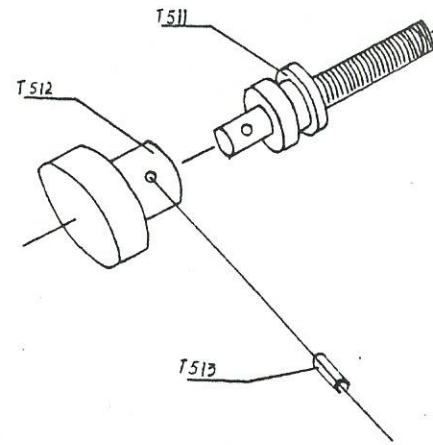

214	key 4×10
215	gear
216	hex nut M10
217	roll pin(3×8
218	roll pin(4×20
219	flat point set screw M5×20
220	hex nut M5
221	pan head screw M5×12
222	gear C
223	gear C(2)
224	gear C(1)
225	brass bushing
226	cover
227	taper roller bearing 2007108(40×(68×18
228	gasket(left)
229	duplex gear(B)
230	brass bushing
231	cover(left)
232	hex socket head cap screw M5×6
233	spacer
234	V—belt Z710
235	pulley
236	spanner nut M40×1.5
237	locking washer φ40
238	pulley spacer
239	external snap ring φ63
240	key 10×25
241	hex socket cap screw M5×12
242	bracing plate
243	oil plug
244	O ring
245	spindle
246	hex head bolt M8×25
247	key 8×22
248	flange
249	gasket(right)
250	taper roller bearing 2007109 φ45 φ75×19
251	locking ring
252	gear A
253	cone point set screw M8×10
254	key 5×14
255	hole plug
256	hole plug
257	shaft C
258	shaft B
259	brass bushing
260	oil glass
261	fork
262	spacer(12
263	fork arm
264	straight pin(B12×45
265	handle knob M10×32
266	spacer
267	handle
268	handle seat
269	steel ball φ6.5
270	spring φ5×0.8×15
271	flat point set screw M8×5
272	roll pin φ4×25
273	roll pin φ5×18
301	connection tube φ10
302	round phillips screw M4×16
303	round phillips screw M4×8
304	electric box
305	hex socket head cap screw M6×10
306	electric housing
307	pulley box
308	micro switch LX5—11N
309	connection tube
310	pan slotted screw M4×25
311	electrical panel
312	relay B16
313A	killoff switch LAY3
314A	start switch LA19
315	wire block
316	pan phillips screw M4×10
317	light indicator AD11
318	on—off switch H25—10
319	electrical plate
320	pan phillips screw M4×10
321	pivot

322	straight pin φA2×12
323	spring 9×0.8×50
324	hex nut M4
325	roll pin φ3×14
326	latch piece
327	flat head phillips M4×16
328	micro switch lever
329	hex nut M5
330	door
331	round head screw M5×35
332	stud
333	knob A8×32
318D	on—off plate
318E	switch knob
318C	switch seat
318B	flat head screw M3×15
318F	pan head screw M2×12
401	idle pulley
402	ball bearing 104φ20×φ42×12
403	spacer
404	shaft
405	washer
406	flat slotted screw M5×10
407	cover
408	washer φ12
409	handle
501	V—belt Z800
502	hex socket head cap screw M10×40
503	mill—drill head
504	mill—drill head support column
505	brake pad(pair)
506	brake spacer
507	stud AM10×80
508	handle seat
509	handle
510	handle knob BM10×80
511D	on—off switch plate
512	switch plate
513	flat slotted screw M5×8
514	frame cover
515	eccentric flange
516	hex socket head cap screw M6×20
517	cone point set screw M8×12
518	motor pulley
519	pan phillips screw M4×6
520	see—through window
521	mill—drill cover(upper)
522	pulley seat flange
523	hex socket head cap screw M6×40
524	taper pin φA5×45
525	ball bearing 108φ40×φ68×15
526	external snap ring φ40
527	V—belt Z860
528	mill—drill pulley
529	knob CM8×25
530	cap
531	pan nhillips screw M5×10
532	mill—drill cover post
533	post insert
534	micro switch LX5—11H
535	brake spacer
536	stud AM10×60
537	handle BM10×80
538	dog point set screw M8×14
539	flat point set screw M8×12
540	cone point set screw M8×20
541	hole plug
542	cone point set screw M8×12
543	mill—drill cover(lower)
544	washer φ6
545	pan head screw M6×12
546	motor mount
547	hex head bolt M10×30
548	mill—drill cover post
549	connectoin tube(M162pcs,M181pc)
550	motor(same as #111)
551	key A5×16
552	tension handle
553	pan head screw M6×20
554	eccentric shaft

555 idle pulley
556 ball bearing 104φ20×φ42×12
557 spacer
558 external snap ring φ42
559 bearing cover
560 flat head srew M5×10
561 quill
562 gasket
563 ball bearing 2007107φ35×φ62×17
564 spline spindle
565 cover
566 cone point set screw M5×6
567 bearing 2007106φ30×φ55×16
568 spanner nut M30×1.5
569 washer φ30
511E on—off switch
511F pan head screw M2×12
511A switch, mill motor
511B switch seat
511C flat head screw M3×15

601 quill feeding box
602 gear shaft
603 key 6×14
604 cone pointset screw M6×8
605 worm gear
606 clutch jaw
607 taper pin φD5×28
608 stud
609 dial
610 spring piece
611 dial seat
612 handle
613 handle knob BM8×40
614 cone point set screw M6×18
615 knurled knob BM10×40
616 worm
617 dial seat
618 spring
619 screw M5×25
620 worm shaft
621 roll pin φ4×20
622 crank
623 roll pin φ4×14
624 handle M8×40
625 roll pin φ5×35
626 oiler φ6
627 spring housing cover
628 spring housing
701 hex socket head cap screw M6×20
702 straight pin Aφ5×25
703 trestle B
704 table
705 oilet φ6
706 trestle A
707 locking screw
708 locking lever
709 roll pin φ2×10
710 hex head bolt M4×12
711 handle M6×50
712 washer
713 handwheel B12×100
714 dial seat A
715 spring piece
716 dial
717 fixing sleeve A
718 spanner nut M14×1.5
719 ball bearing 8102φ15×φ28×9
720 spacer A
721 gear
722 key 4×18
723 T—key
724 cross feed screw
725 cross feed nut
726 adjust screw
727 table gib
728 carriage gib
729 cone point set screw M6×8
730 taper pin 5×25
731 carriage
732 cone point set screw M8×16
733 flat point set screw M8×12
734 pin

735 locking stud
736 handle knob M6×20
737 handle M6×32
738 flat point set screw M8×8
739 spring Φ6
740 steel ball Φ6.5
741 handle seat
742 handle BM6×50
743 eccentric wheel
744 roll pin Φ4×30
745 arm
746 half nut seat
747 stop pin
748 half nut
749 spacer E
750 spacer B
751 gear
752 roll pin Φ4×22
753 spacer C
754 shaft pinion
755 dial
756 fixing sleeve B
757 shaft
758 key 5×8
759 gear
760 apron
761 cone point set screw M8×16
762 spacer D
763 bevel gear
764 pan phillips screw M6×8
765 washer Φ6
766 pull-push knob
767 washer Φ12
768 gear
769 shaft
770 dial seat B
771 brass bushing
772 shaft
773 gear
774 spacer 12
775 brass bushing
776 spacer 26
777 washer
801 step motor bracket(X) (longitudinal)
802 hex socket head screw M8×20
803 step motor
804 hex socket head screw M5×15
805 small timing pulley
806 large timing pulley
807 timing belt
808 hex socket set screw M5×16
809 hex socket set screw M5×12
810 cover (X)
811 pan phillips screw M4×8
812 step motor bracket (Y) (transversal)
813 spacer
814 straight pin Φ5×12
815 shaft
816 straight pin Φ4×12
817 timing belt 100X1.037
818 motor mount
819 cover (Y)
820 step motor bracket (Z) (vertical)
821 spacer
822 timing belt
823 cover (Z)

901 tailstock
902 T-key
903 tailstock nut
904 tailstock barrel
905 set screw M4×8
906 tailstock screw
907 key C4×18
908 spacer
909 straight pin D Φ5×8
910 nut seat
911 hex socket head screw M5×20
912 dial
913 dial seat
914 spring piece
915 handwheel B12×100
916 washer Φ10
917 acorn nut M10
918 handle M6×50
919 locking pad (lower)
920 locking pad (upper)
921 stud AM10×40

922	locking spacer
923	handle seat
924	handle
925	handle knob M10×32
926	oiler φ6
927	set screw M10×50
928	key
929	set screw M5×12
930	washer φ10
931	hex head bolt M10×40

T101	box
T102	cover arbor
T103	pan slotted screw
T104	sleeve
T105	set screw
T106	switch
T107	pan slotted screw
T108	spring
T109	screw
T110	cover
T111	hex socket cap screw M6×30

T201	threading dial seat
T202	shaft
T203	indicator plate
T204	pan phillips screw M4×12
T205	gear
T206	set screw M5×8
T207	revet φ2×4
T208	hex socket head screw M6×12
T209	threading dial plate

T301	cover mount(left)
T302	flat slotted screw M4×10
T303	leadscrew cover(left)
T304	cover seat(left)
T305	hex socket head screw M6×12
T306	cover seat(right)
T307	cover mount(right)

T401	hex nut
T402	micro switch
T403	pan head screw
T404	cover support
T405	hex socket cap screw
T406	support arbor
T407	pan head screw
T408	stell ball φ6.5
T409	spring 0.8×5×14
T410	flat set screw
T411	hex nut
T412	set screw
T413	connection tube
T414	cover

T501	steady rest center frame
T502	steady rest center frame head
T503	small knob
T504	washer(8
T505	locking bolt
T506	cotter pin(6×20
T507	washer(6
T508	locking pin
T509	brass head
T510	finger sleeve
T511	adjusting bolt
T512	large knob
T513	roll pin(3×16
T514	slotted set screw,dog point,M6×16
T515	hex nut M6
T516	hex socket head screw M10×35
T517	washer(10
T518	chock
T519	knurled screw

T601	large knob
T602	roll pin M3×16
T603	adjusting bolt
T604	finger sleeve
T605	brass head
T606	follow rest frame

T607	set screw dog point set screw M6×16
T608	hex nut M6
T609	knurled screw
T701	nut M10
T702	washer 10
T703	T—belt M10×30
T704	screw M4×12
T705	key
T706	base
T707	screw
T708	rubber
T709	vice
T710	jaw washer
T711	hex socket head screw
T712	handle B8×25
T713	pin φ3×16
T714	nut M10×1
T715	dial seat
T716	spring plece
T717	dial
T718	screw seat
T719	oiler
T720	screw
T721	pin
T722	screw TR12
T723	nut TR12
T724	angle rule
T725	mobile jaw
T726	set pin
T727	hex socket head screw(M5×8
T728	set screw
T729	gib
T730	bolt M10×100
T731	tool base
T732	spring φ5×0. 6×30
T733	positioner
T734	tool post
T735	screw M8×25
T736	set washer
T737	nut M10
T738	handle
T739	handle knob M10×32