SHOPMASTER ™

SHOPTASK 17-20 GOLD SERIES
SHOPTASK ELDORADO
SHOPMASTER 2000

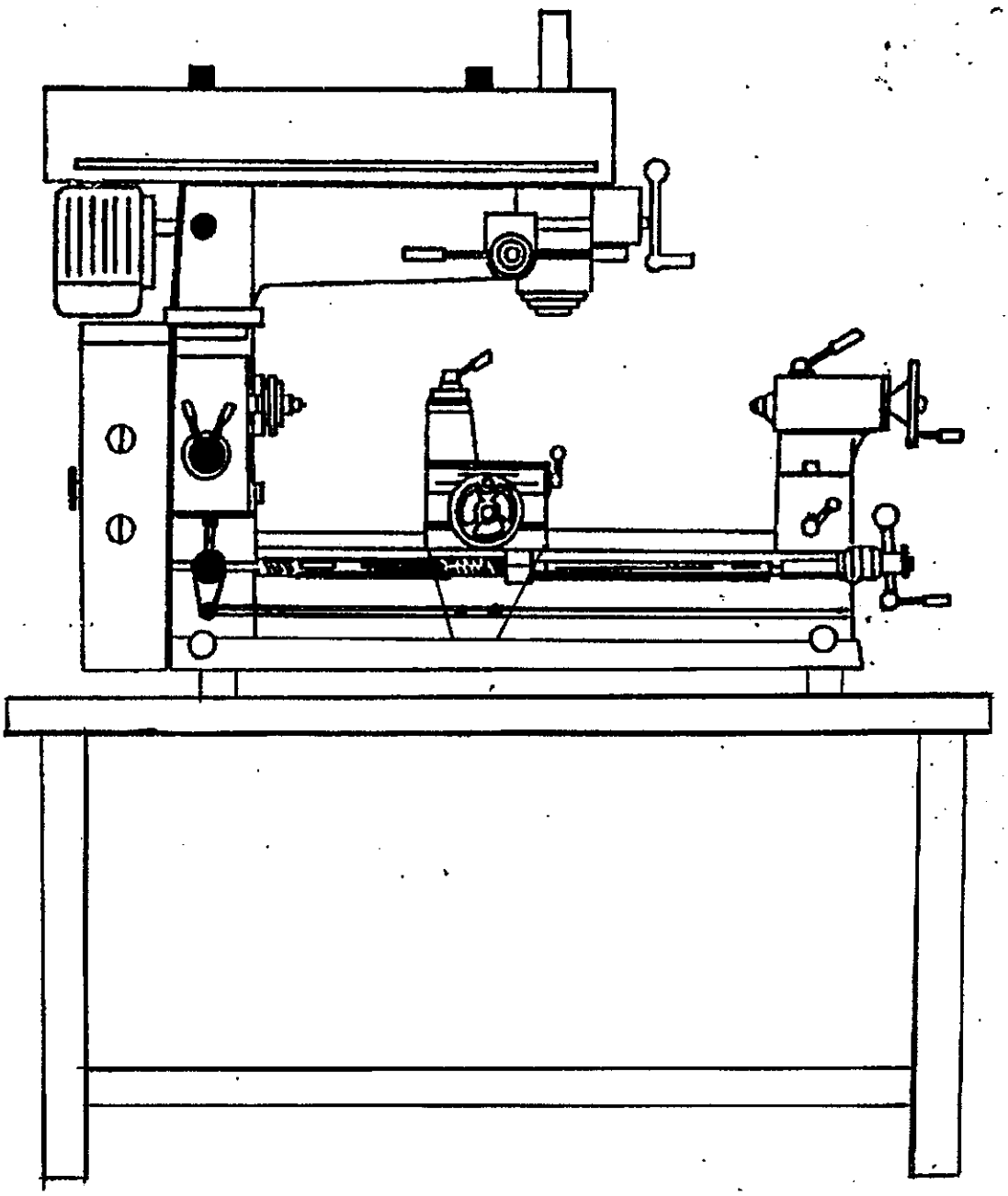

OWNERS MANUAL

MOTOR WIRING SECTION

ILLUSTRATION A-3

WIRING DIAGRAM FOR CABLE FROM SWITCH TO MOTOR TERMINAL BLOCK

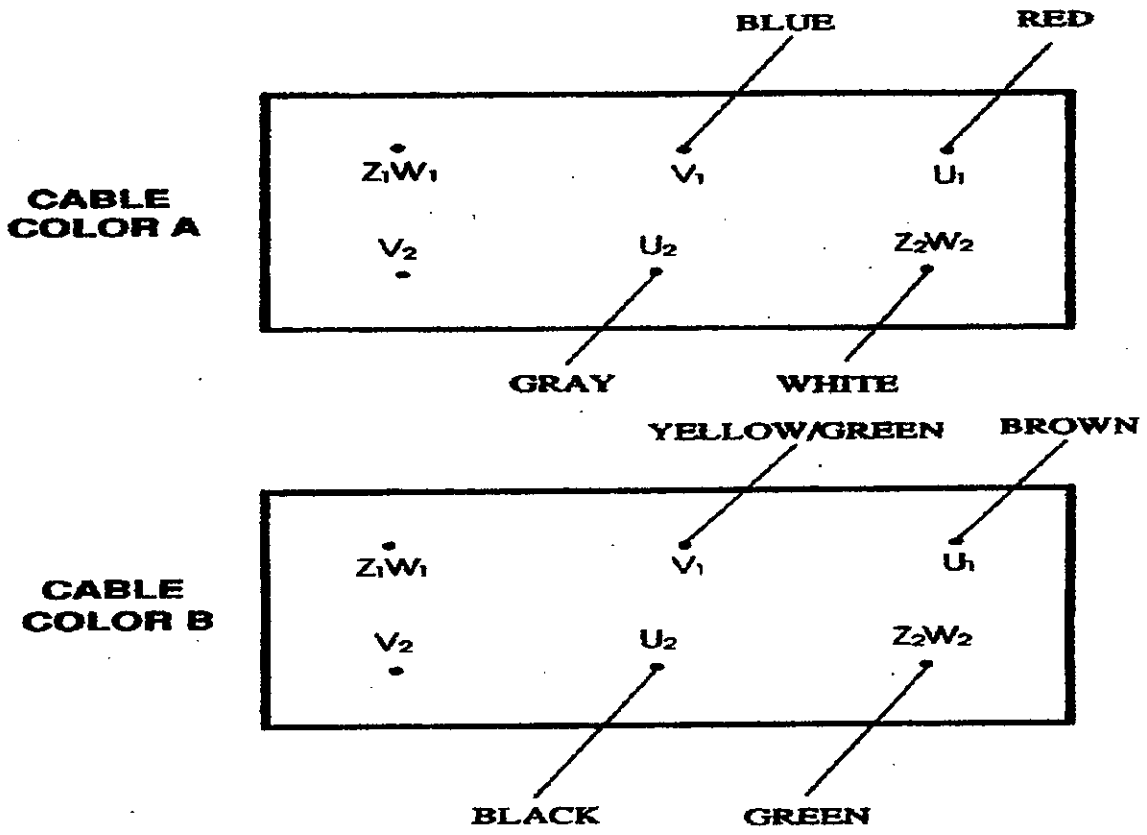

SHOPMASTER 2000 MACHINES USE CABLE COLOR "A"

PLEASE NOTE, YOUR WIRES HAVE TAGS MARKED WITH THE PROPER TERMINAL DESIGNATION

TO REVERSE THE MOTOR DIRECTION
SWITCH WIRES V_1 AND Z_2W_2

ILLUSTRATION A-4

WIRING DIAGRAM FOR POWER CORD

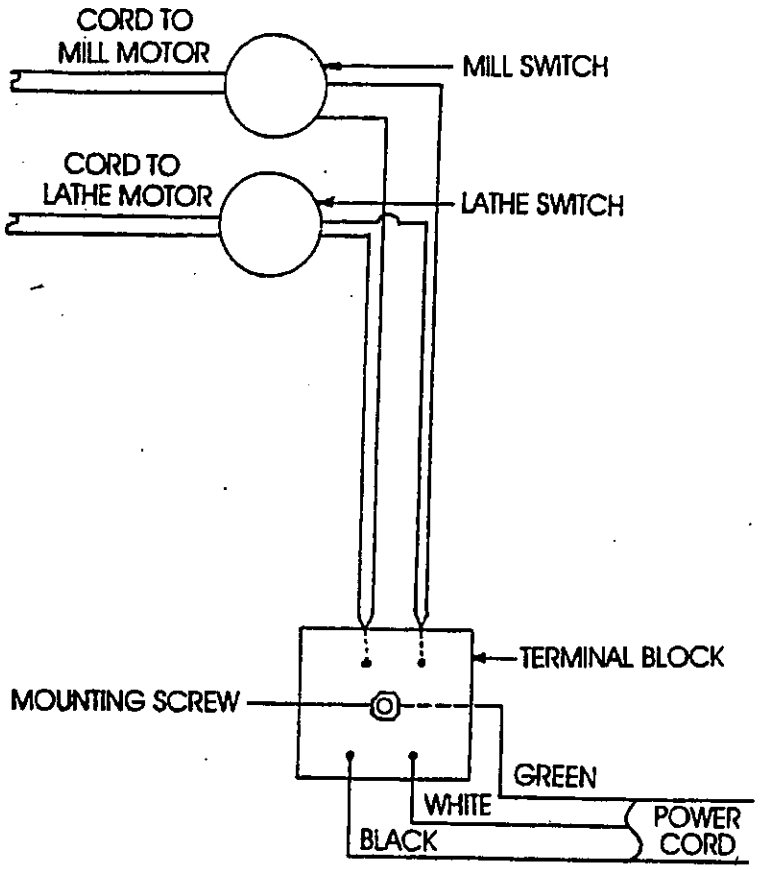

CAUTION ON MOTORS !!!!

THE MOST COMMON FAILURE OF AN INDUCTION MOTOR IS THE START CAPACITOR. THIS IS EASILY FIXED, BY REPLACING THE CAPACITOR. HOWEVER, ALLOWING THE MOTOR TO RUN SLOWLY DUE TO CAPACITOR FAILURE WILL OVERHEAT THE WINDINGS AND BURN THEM OUT. THIS WILL VOID YOUR WARRANTY. THEREFORE, IF YOU HAVE A MOTOR PROBLEM, STOP AND CALL FOR ASSISTANCE IMMEDIATELY.

13

ILLUSTRATION A-5

WIRING DIAGRAM FOR MOTOR CAPACITORS

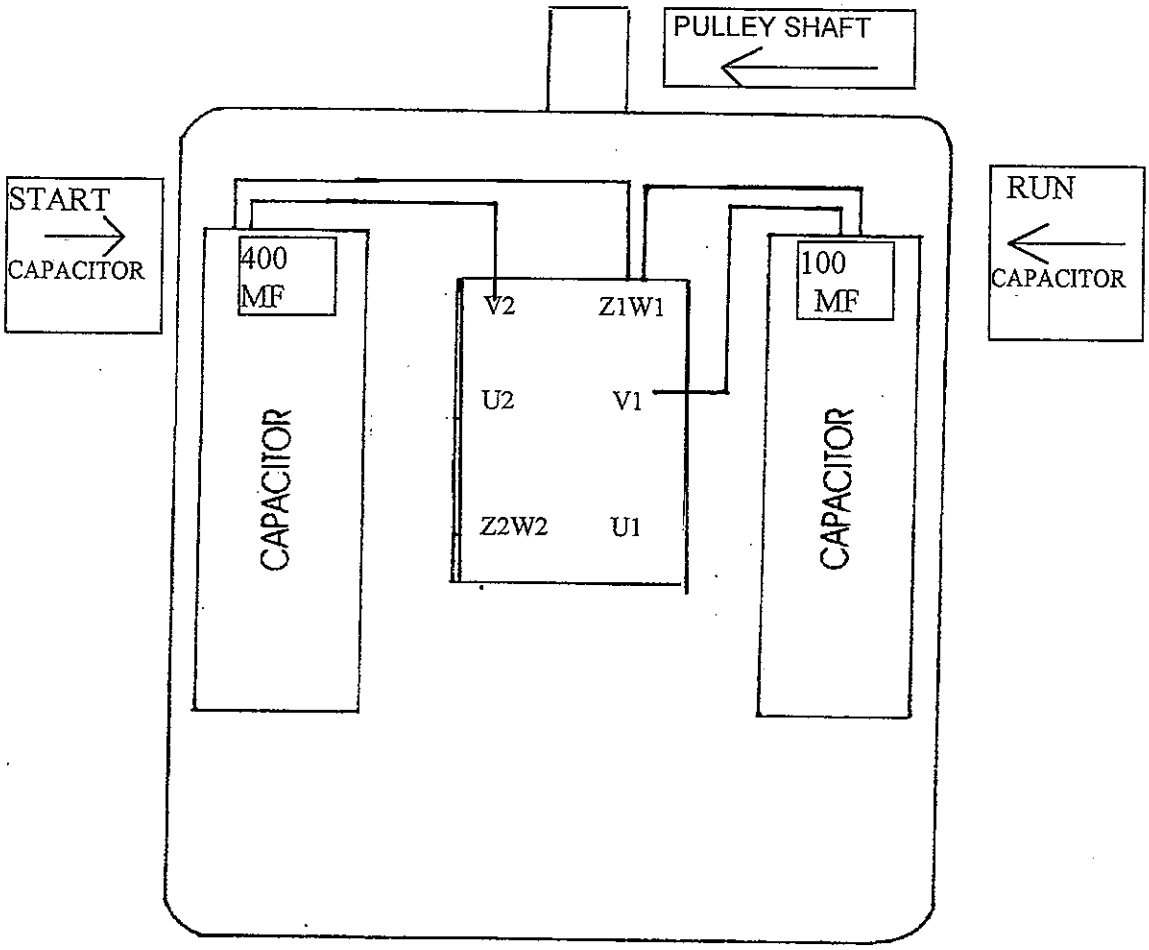

CAPACITORS ARE NOT POLAR, SO IT IS ONLY IMPORTANT TO BE SURE THE WIRES GO TO THE PROPER TERMINALS.

CAUTION:

CAPACITORS CAN HOLD A CHARGE AND GIVE YOU A PAINFUL SHOCK- ALWAYS DISCHARGE THEM BEFORE SERVICING.

ILLUSTRATION A-6

MOTOR WIRING DIAGRAM

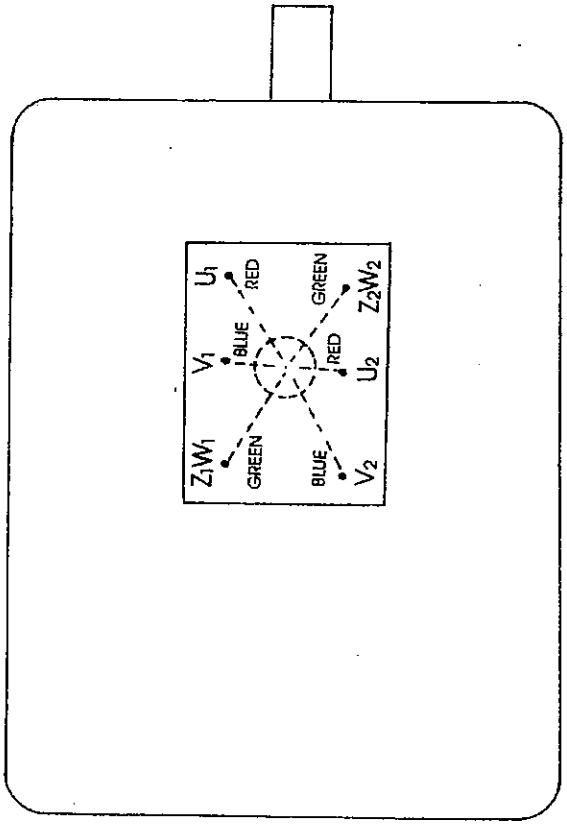

OHM TEST (with motor off)

BEFORE DOING TEST, ALL CAPACITOR AND SWITCH CABLE WIRES MUST BE DISCONNECTED AND THE **POWER SUPPLY DISCONNECTED.**

Internal switch V_1V_2 closed. This means you should have no resistance. The internal switch completes the circuit for the start winding and opens when the motor reaches 1750 RPM. If you have an open circuit (infinite resistance) it indicates that the switch is not making contact and the start winding is not operating. This will result in a symptom like a bad start capacitor- the motor will run slowly – **DO NOT LET THE MOTOR RUN SLOWLY , AS IT WILL BURN OUT THE WINDING AND VOID YOUR WARRANTY!**

Start winding Z_1W_1-Z_2W_2 The start winding should have a resistance of about 1.4 OHMS- this can vary plus or minus 10%- If your resistance is too low or zero, it indicates a shorted winding. If it is too high, it indicates an open winding(wire broken)
I

Run winding U_1-U_2 : The run winding should have a resistance of about .8 OHMS plus or minus 10%.

SWITCH WIRING DIAGRAM

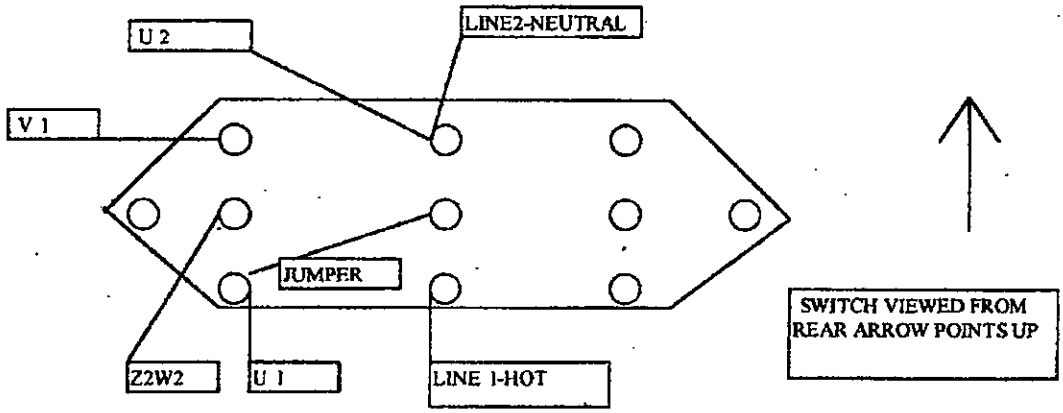

NOTE: THIS VIEW IS FROM THE REAR OF SWITCH.

LINE 1 IS YOUR BLACK WIRE
LINE 2 IS YOUR WHITE WIRE

THE 2 SWITCHES ARE CONNECTED BY JUMPER WIRES AND CONNECTED TO THE POWER CORD TERMINAL BLOCK.

SHOPMASTER CONTROLS

Take a few minutes to familiarize yourself with the location of the various controls on your machine. This will make using your Shopmaster much easier when you are ready to operate the machine.

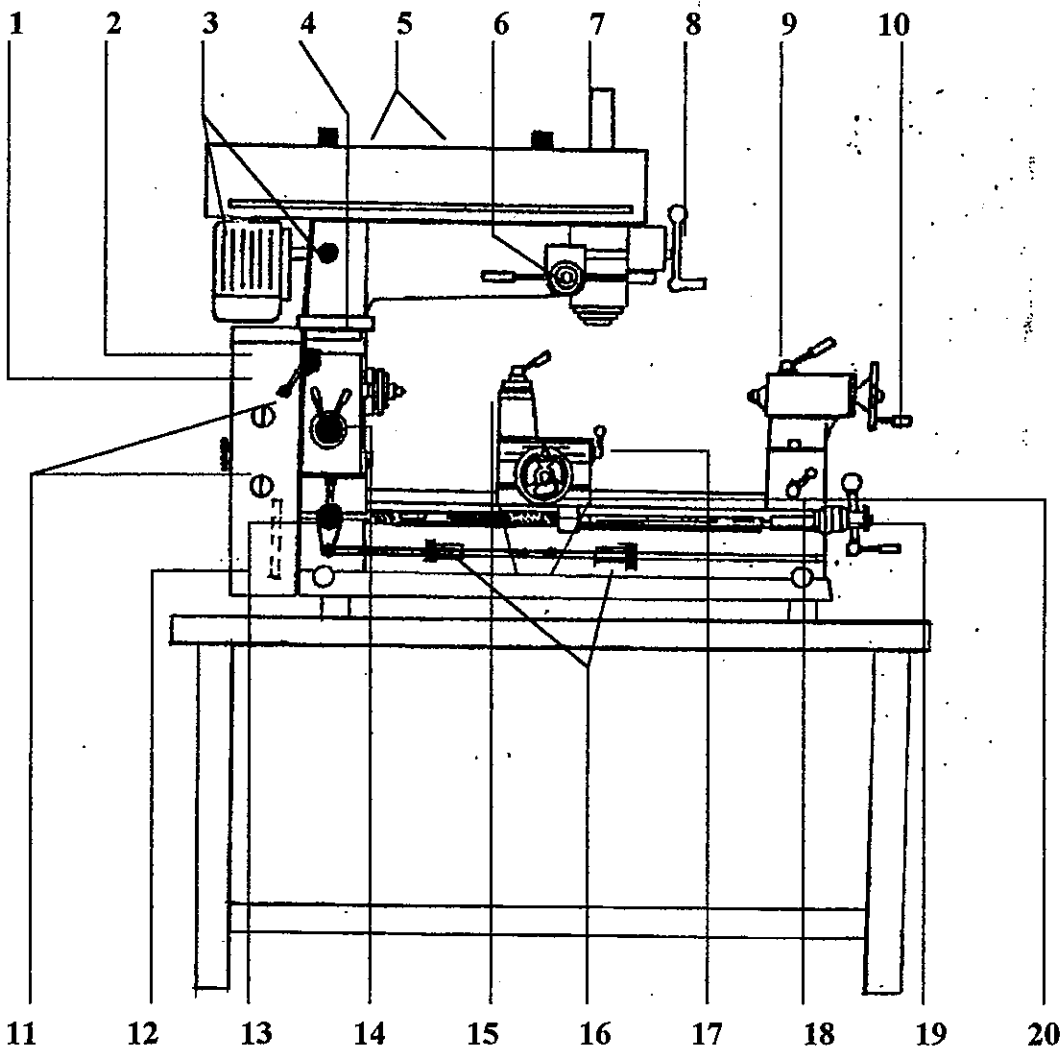

1. HIGH-LOW SPINDLE SPEED LEVER AND SPINDLE BRAKE
2. LATHE BELT TENSIONER (REAR OF HOUSING)
3. MILL MOTOR AND TENSIONER KNOB
4. MILL HEAD SWIVEL LOCKS (PIN LOCK FRONT-FRICTION LOCK REAR)
5. MILL DRIVE BELTS (INSIDE COVER)
6. MILL/ DRILL PRESS SELECTOR KNOB
7. MILL SPINDLE AND DRAWBAR
8. MILL FINE FEED HANDLE

9. TAILSTOCK/STEADY REST
10. TAILSTOCK BARREL HANDLE
11. MOTOR SWITCHES
12. POWER FEED AND THREADING GEARS (INSIDE HOUSING)
13. LEAD SCREW ENGAGEMENT GEARBOX
14. HIGH-LOW GEARBOX FOR POWER FEED
15. ADJUSTABLE TOOLPOST
16. POWER FEED AND THREADING AUTO STOPS
17. CROSS SLIDE TABLE AND LOCK
18. DOUBLE PRE-LOADED ACME NUTS
19. X AXIS CARRIAGE HANDLE
20. POWER TAILSTOCK ENGAGEMENT

CONTROL FUNCTIONS

1. The high-low spindle speed and spindle brake is operated by a shifter mechanism mounted on the sheet metal housing near the top corner. The shifter block is spring loaded and has a pin lock for all 3 positions. In the center position, the shift block releases tension on both drive belts from the motor to the first pulley. At the same time, the special spring loaded lever arm is forced against the pulley and the friction material stops its rotation. The tension of the brake is determined by adjusting the 2 adjuster screws against the lever arm. Tension should be set so that the lathe chuck stops when neutral is engaged, but the chuck can be rotated with the use of the chuck in the scroll drives. This will allow you to turn the chuck even while the brake is engaged.CAUTION- DO NOT CHANGE PARTS OR ROTATE THE CHUCK WHILE THE LATHE MOTOR IS RUNNING. ALWAYS INSURE THAT THE SHIFTER IS FULLY SEATED INTO IT DETENT POSITION BEFORE MEASURING ANY PARTS HELD IN THE CHUCK.

When you shift the lever down, the low speed belt will be engaged and your spindle will rotate at the low ratio. When the lever is moved up, the high speed belt is engaged and the spindle will rotate at the higher speed. For the majority of lathe operations you will find that selecting

a medium speed, such as 1000 rpm in the high range will give you a good set of speeds for many operations. You can see that when the lever is engaged in neutral, the motor will run free because both drive belts are free of tension. There are 2 adjustments to keep your High-Low speed belts operating properly.

A. Motor tension is adjusted by the threaded rod coming from the rear of the lathe column and attached to the motor mount. By moving the mount away from the column, the belt tension will be increased. However, the belt should not be too tight so that when in neutral, the pulley will drag against the belts. This would creat a squealing and burning of the belts. Only allow enough tension on the motor mount so that the belts are properly tensioned when engaged in high or low speed.

B. The belts are also retained by a roller bearing idler mounted in a slotted bracket. This idler keeps the belts at the proper angle to prevent them from falling off the pulley when one speed is engaged or when the system is in neutral for a period of time. This idler should also have just enough tension to support the belts, but not so much as to cause dragging in neutral.

You will see that the motor drives a pulley which acts as the spindle brake. The mounting bracket of this pulley contains the brake adjuster screws and also has slotted holes. The slotted holes are for alignment of the pulley shaft, since the shaft is in a threaded hole in the casting and the plate is mounted to the sheet metal housing, the slotted holes allow proper alignment of the 2 parts. The pulley runs on 2 roller bearing which should be cleaned and re-packed every 100 hours of use.

This pulley also has a removable chain sprocket which drives the chain to the next pulley in line, The chain is tensioned by an idler sprocket mounted to a sliding plate bolted to the casting. The chain should be oiled periodically with chain oil, but not too much that will sling around and contaminate the belts.

2. The belt tension and speed selection for the lathe spindle is controlled by a sliding idler puller moved by a handle and acme screw thread. The handle is found in your accessories box and should be installed onto the square drive found on the rear of the sheet metal housing. The main drive belt system consists of 3 pulleys and 2 belts.

The first pulley in line is mounted on a shaft threaded into the casting and riding on 2 roller bearings. These bearings should be cleaned and packed every 100 hours of use. This pulley is driven by the chain from the pulley described in the previous section. This primary pulley drives the center idler with a belt, and the center idler drives the main spindle pulley with the second belt. Tension and speed selection is accomplished by turning the adjuster crank. As the center idler moves on its sliding mount, it also has a second swing arm which allows both belts to be tensioned at the same time and to the same tightness. Simply turn the crank to release the belt tension, select the ratio of drive for the speed desired and re-tighten the crank. CAUTION: THE CRANK CAN PUT AN EXTREME AMOUNT OF PRESSURE ON THE SYSTEM IF OVERTENSIONED- USE COMMON SENSE AND TIGHTEN THE BELTS ONLY ENOUGH FOR NON SLIPPAGE.
The center idler pulley also rides on 2 roller bearings which should be cleaned and packed every 100 hours.

3. **The mill motor is mounted to a plate with 2 steel pins that fit into bored holes in the mill casting. On each side of the mill head is a knurled bnob that tightens against the pins. To release tension on the motor belts, simply loosen the knurled knobs a bit, push the mill motor into the head and you can now move the mill belts from one pulley to another to select your speeds. To tension the belts, pull out on the motor by hand and re-tighten the knurled knobs.**

4. **The mill head on the Shopmaster swivels 360 degrees in a horizontal plane. It rests on a machined and ground steel swivel plat which has a steel pin extending about 5" into the main lathe column casting. To secure the mill head during milling operations there are 2 separate clamps. On the front of the mill head you will find a pin lock which is mounted in a steel bracket. The pin lock threads through the steel bracket and fits into hole drilled into the steel swivel plate. When swinging the head out from the table to change tools, the pin lock allows you to return to your original position with no loss of accuracy. On the opposite side of the mill head is a friction lock which has 2 half round steel locks which grip the swivel pin. NOTE: The front pin alone is not sufficient to hold the head securely- use this for**

positioning and always clamp the rear lock for maximum holding power. Also, because the mill motor is attached by a high tension cable, allowing the head to rotate a full 360 degrees could create a dangerous situation. Therefore, the front pin lock also acts as a stop to prevent full rotation.

5. **Beneath the mill belt cover you will find the 2 drive belts for your milling speed selections. The primary belt drives from the motor to an idler and the secondary belt drives from the idler to the spindle pulley. The center idler pulley runs on 2 roller bearings which should be cleaned and packed every 100 hours. The center idler swings on a swing bracket in the mill head, so when pulling out on the motor, both belts are automatically tensioned. Hand pressure is all that is necessary, overtensioning can cause a wobble and vibration from the idler pulley.**

6. **In the center of the chrome bezel for the mill drill dial, there is a black plastic knob. This knob allows you to change from mill feed to drill press feed. It operates a dog clutch attached to the worm gear inside the block on the front of the mill head. Pulling out on the knob releases the clutch from the worm and allows the quill to be moved up and down with the drill press handles. Pushing in on the knob engages the worm drive and allows the mill fine feed handle to operate. It may be necessary to move the drill press handles a bit to allow the dog clutch teeth to engage. Acting in conjunction with these feeds is the mill/drill depth stop. A threaded rod attached to the mill quill moves up and down in a steel angle bracket. By turning the stop adjuster you can set the depth of your quill stroke to insure a series of holes to be of equal depth. The adjuster knob is marked in 0.001" increments for fine positioning, and has a button release for fast positioning. Just push in the spring loaded nut and slide the knob along the rod to your position, release the spring nut and make final adjustments by turning the dial.**

7. **The mill spindle rides inside the quill shaft on 2 tapered roller bearings. It has a splined top half which slides through matching splines in the main drive pulley to allow it to be driven and move up**

and down at the same time. The tapered roller bearings are pre greased at the factory, and should be cleaned and packed every 100 hours. The main drive pulley is a light press fit over a large roller bearing held to the head by a mounting flange. To remove the pulley, even pressure can be applied from below with 2 prybars and the pulley will come off the bearing. Once the pulley is removed, the bearing flange can be removed and the bearing serviced. With the bearing removed. You can remove the spanner nut holding the top roller bearing in place and remove the spindle to service those bearings. We recommend a good quality lithium grease (wheel bearing) to service these parts.

8. The mill fine feed handle is used when finer movements are required. With the dog clutch engaged in the mill position, simply turn this handle to feed the quill down. You have 2 dials to read your movements; On the center of the bezel is a large dial which reads in 1mm increments. On the shaft with the handle is a dial which is graduated in 0.001" increments. 1 full turn of the handle will feed your quill 0.150". The fine feed handle is held to the shaft by a tapered pin. By carefully removing the pin, the handle and the sheet metal cover, you will expose the CNC drive pulley and motor mounting plate.

9. Your Shopmaster is equipped with a combination tailstock and steady rest. The tailstock assembly is held into the steady rest portion by 3 allen bolts and is centered by a machined flange. When using the tailstock, it is quite conventional, with a barrel that has a Morse #3 taper and travels out of the casting 7". Use this for deep hole drilling of parts mounted in your lathe chuck. For precise operations, the dial reads in 0.001" increments, with 1 turn being 0.010" of travel. The barrel can be locked in place with the barrel lock. The base has a dovetail slide and 4 locking bolts. By loosening these bolts and turning the allen adjuster bolts, the tailstock and steady rest can be offset for turning tapers. The tailstock base has adjustable gibs and a clamp lock to set its position along the main base casting. The tailstock also has an engagement to allow it to be attached to the main carriage and can be driven by your X axis power feed or your CNC system for repetitive operations.

10. This handle locks the tailstock barrel in place.

11. The Shopmaster is equipped with push button safety style switches for the lathe and mill motors. The color markings are easy to remember, with green being forward , the black reverse and bright red for off. Should it become necessary to shut the machine down quickly, just push the red center button.

12. When you open the large door at the left side of the machine, you will find your power feed and threading gear set. The factory has already installed one set gears on the machine, this one is the lowest feed rate and is used for turning operations. By reading the chart in this manual and on your machine you can select the gears you need for cutting various types of threads. The gear assembly consists of 3 main parts.
    A. The primary drive gearbox which is contained in the lathe column casting.
    B. The change gear sets as characterized by their 4 spline center holes and fine module teeth.
    C. The final drive gear box and lead screw engagement.

Inside the lathe column you have a cluster gear which is driven by the lathe spindle and a sliding cluster gear which switches from high to low ratio and powers the final output gear. This out put gear drives a combination gear, which has a course tooth gear on one end and a spline on the other to accept the fine tooth change gears. This combination gear rides on Shaft "A". Next in line are 2 gears of the fine tooth style riding on shaft "B" and finally, another combination gear, separated by a spacer. The final fine tooth gear and a course tooth gear ride on shaft "C". this final course tooth gear drives 2 idler gears held in a bracket, which in turn engage the lead screw when the sliding gear is moved by the lead screw shifter. **REMEMBER, WHEN CHANGING RATIOS, YOU ONLY CHANGE THE FINE TOOTH GEARS. THESE GEARS ALWAYS MESH AS FOLLOWS- A TO B AND C TO D WITH B AND C ON SHAFT "B"**

You will also see that the CNC drive pulley and ball bearing support are installed on the end of the lead screw. If you are not using CNC, you may remove these 2 items and put them away, it will make changing

your gears a bit easier. To remove the CNC pulley, remove the nuts holding the bearing bracket in place. Shift your lead screw shifter into the reverse position. This will expose the set screw holding the CNC drive pulley. Loosen the set screw and pull the pulley off the end of the lead screw. Replace the nuts from the bearing bracket along with some washers to take up the extra space.

When changing gears, you have 2 adjustments to mesh your gears properly. Shaft "B" which holds gears B and C moves in 2 directions. It is attached to a bracket which swings when the allen bolt is loosened, and it also slides up and down in a slot when the square end of the shaft is loosened using the "T" handle from your toolpost.

KEY TO DIAGRAM

1. SHAFT "A" WITH BUTTON OILER IN CENTER
2. SHAFT "B" WITH SQUARE DRIVE END
3. SHAFT "C"
4. ADJUSTER SLOT WITH ALLEN BOLT
5. GEAR "A"
6. GEAR "B"
7. GEAR "C"
8. GEAR "D"
9. SWIVELING PLATE
10. SLOT IN PLATE FOR SHAFT "B"

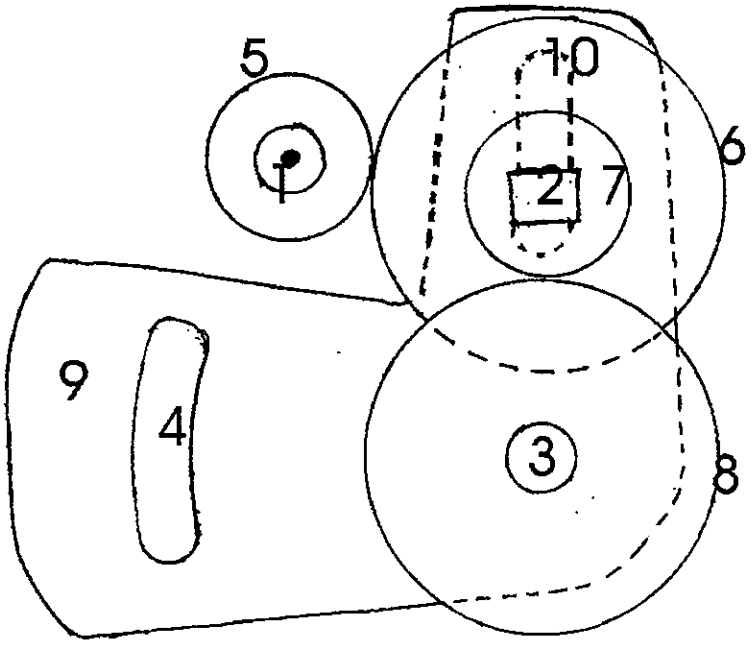

CHANGING GEAR RATIOS

1. remove the " C " clips from shafts A,B.C
2. loosen the allen screw adjuster nut and swing gear "B" away from gear "A", loosen the shaft "B" with your toolpost tool.
3. remove the gears from the shafts. On shaft "A" you will remove the fine tooth gear from the shaft end leaving the course tooth gear in place, on shaft "B" you will remove both gears and on shaft "C" you will remove the fine tooth gear, leaving the spacer and course tooth gear in place.
4. Place your new gear "A" on shaft "A"
5. Place your new gear "B" on shaft "B" followed by your new gear "C".
6. Place your new gear "D" on shaft "C"
7. Slide shaft "B" down until gears "C" and "D" are meshed and then tighten shaft "B"
8. Swing shaft "B" until gears "A" and "B" are meshed and tighten the allen adjuster.
9. Replace all "C" clips
10. Engage your lead screw gearbox and turn the spindle by hand to test the mesh of the gears before turning motor on.

13. The lead screw engagement gearbox activates the sliding gear which meshes with the final output gears in your gear box assembly. Moving the lever to the left will engage forward and travel your main carriage toward the lathe spindle. In the center (straight up) position, your lead screw is disengaged from the gears and can be turned using the X axis handle or your CNC drive if you have one installed. Moving the handle to the right will travel your carriage toward the tailstock. Each position has a spring loaded detent to hold it in place, but we recommend that you always keep you hand on or near the lever in case of a problem requiring quick disengagement of the drive. The lead screw gearbox is also controlled by the auto stop rod assembly.

14. This lever operates the high and low gearbox for your primary gearbox speeds. The lever to the left is th low range, straight is neutral and to the right is high range. There is a 2/1 ratio between high and low. **NOTE: The main spindle bearings are splash lubricated by the gearbox, therefore you must <u>ALWAYS have your gearbox in either high or low when running the lathe.</u>**

15. Your Shopmaster toolpost is a turret style with the unique feature of removable and adjustable height tool holders. The main base is held to the table with a long "T" bolt which fits into either of your table slots and can be positioned at any point along the length of the table. Simply loosening the handle allows the entire toolpost to be removed when operating the mill or drill press. The center toolpost section has 4 detent positions for rapid positioning at 90 degree points. The toolpost can be clamped at any angle between as well. 4 holders come with your machine. 2 are lathe tool holders designed for cutting tools up to ½" shank size. One is a combination holder which will accept lathe tools as well as round boring bars due to its "V" slot in the bottom. The last is a parting tool holder designed to accept standard ½" parting tool blades. Each of the holders is adjustable for center height by loosening the main lock bolt and adjusting the allen bolt. Once the height is set, tightening the jam nut on the adjuster bolt will allow you to remove and replace the holder without the need of further adjustments. Extra toolholders may be purchased as spare parts from the parts section of this manual.
16. The auto stop mechanism has several functions. Primarily it is designed as a safety feature to prevent accidents when the operator allows the carriage or part to run into the chuck. By setting the auto stop adjusters at a pre-set point, even if the operator is distracted, the auto stop will disengage the lead screw gearbox before the carriage goes beyond the safety point. The stops can be set for both left and right hand travel. As a tool for production, it can also be set to a predetermined depth when using the power tailstock for deep hole drilling and reaming. When turning up to a shoulder or in a blind hole, the stops will stop your carriage at the pre-set point every time. When threading, the auto stop will start

your carriage at the same point each time and stop it at the same point for easy repeats on your thread passes. The auto stops are mounted on a threaded rod and attached to the lead screw gearbox. When the carriage hits the auto stop it shifts the gearbox into neutral and stops the carriage. Each stop mechanism has a spring to clear the gears once the stop trips the lever. Each stop has a micrometer dial graduated in 0.001" increments for fine turning of your position. To avoid tedious long travel of the dials, each one is equipped with a quick release spring nut which allows the stop to slide along its rod until the position is found and then the spring nut is released for fine tuning with the dial.

17. All the motions on the Shopmaster can be locked down for maximum precision. Each carriage has a lock handle which can hold the table in position or can be set for a certain " drag".
18. The Shopmaster use special double pre-loaded nuts to reduce the inherent backlash in the acme system. On both the X and Y tables, each acme screw has double nuts with a tension spring between them. The nuts are held in a bracket with a clamp lock. When the clamp lock is loosened, the spring automatically forces the nuts away from each other until they are tight against the threads of the lead screw. Because they are now contacting both the leading and training edges of the screw, the backlash is eliminated. As the machine is used and more wear begins to show, it is a simple operation to loosen the bracket and allow the nuts to re-adjust themselves automatically.
19. Use this handle to position the X axis carriage or for manual turning.
20. The tailstock on the Shopmaster can be driven by you X axis power feed. At the end of the tailstock carriage you will find a large knob that is attached to a rod which passes through the base of the tailstock. In the X axis carriage there is a threaded hole into which this rod threads. In this way, the tailstock will now travel along when the X axis carriage is moving. When doing deep hole boring wher a slow and steady feed rate is necessary, simply engage your power feed and leave your hands free to lubricate the drill etc. By using the auto stop mechanism, you can pre-set your drill depth for repeated passes.

HIGH-LOW SPINDLE AND SPINDLE BRAKE

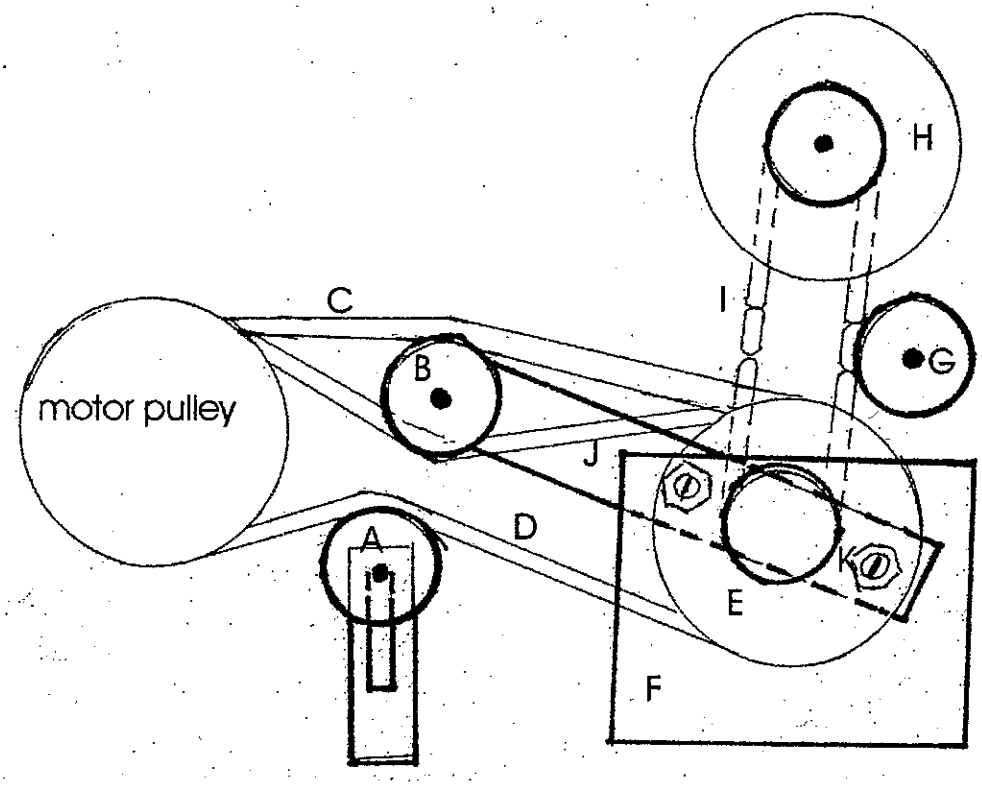

KEY TO PARTS

A. HIGH AND LOW SPEED BELT SUPPORT ROLLER
B. HIGH AND LOW SPEED TENSION ROLLER
C. LOW SPEED BELT
D. HIGH SPEED BELT
E. PRIMARY DRIVE PULLEY
F. MOUNTING PLATE
G. CHAIN TENSION SPROCKET
H. SECONDARY DRIVE PULLEY
I. DRIVE CHAIN
J. ACTIVATION ARM
K. BRAKE ADJUSTERS

OPERATION AND ADJUSTMENTS

Your High-low spindle and brake has 2 main functions.

1. **Switching from High to Low spindle speeds while motor continues to run.**
2. **Stopping the spindle when in the neutral position.**

The lathe motor has a double groove pulley driving 2 identical size belts to the primary drive pulley (E). When the activation arm (J) is in the neutral position, both belts are untensioned, allowing the motor to continue running while the spindle is stopped by the replaceable brake pads. The activation arm is controlled by a rod attached to the High-Low lever on the upper corner of the sheet metal housing . This lever has 3 positive detent positions for High, Low and Neutral . The activation arm has 2 cams which engage the brake adjusters (K) when the lever engages the Neutral position. These cams force the brake pads against the face of the primary drive pulley and stop the motion of the lathe spindle. When either High or Low speed is selected, the brake pads are released and a spring holds the arm away from the primary drive pulley to prevent the brake pads from dragging. The primary drive pulley drives the Secondary drive pulley (H) by means of a roller chain. The chain has an adjustable tensioner sprocket (G) to allow adjustment as time passes. The tensioner is held on a sliding bracket with 2 6MM screws tapped into the machine casting. You will note that the mounting plate (F) also has 2 adjustable slots with allen type screws. Because the Shaft for the primary drive pulley is tapped into the machine casting, and the plate attaches to the sheet metal housing, these slotted holes allow the plate to be centered to the shaft.

ADJUSTMENTS

The belts from the motor to the primary drive pulley have 2 adjustments. The motor itself is on a moving mounting plate and is adjusted by a threaded adjuster rod coming off the rear of the lathe column. There is also a slotted bracket which holds the support roller (A) and allows it to move up and down. The motor should be adjusted so that the belts are loose in the neutral position. Once done, the nuts on the adjuster arm should be securely tightened to prevent the motor from vibrating them loose. The support roller should be adjust up to hold the belts into position, so the belt not in tension does not tend to come loose from the pulley groove. Care should be taken, so that when engaged in either High or Low speed, there is sufficient tension to drive the spindle without slippage, but not too much that the belts drag when

in neutral. This would create heat and friction on the belts and cause a howling or squeaking sound in neutral.
The chain from the primary drive pulley to the secondary drive pulley should have about ¼" deflection om the side opposite the idler pulley. The idler can be moved by loosening the 2 allen bolts and sliding the bracket in the slots.
The brake adjusters should be adjusted, so that when in neutral, the spindle pulley will stop, but can still be turned by placing the chuck key in the scroll slot. Too much brake tension will make it hard to engage high or low speed. The brake pads are replaceable once they have worn away. To adjust the brakes, loosen the lock nut on the adjuster screw and turn them to the desired place and re-tighten the lock screw.
The engagement rod from the handle to the activation arm can be adjusted by removing the cotter pin from the upper clevis and adjusting the length so the brakes are engaged fully when the handle is in the neutral detent position.

CAUTION

The spindle brake is designed to allow you to stop the spindle and measure parts during operations. But it is not designed to allow you to change parts- always turn the motor off before attempting to loosen the chuck jaws.

THREADING INSTRUCTIONS

Your Shopmaster machine uses a different style of threading system than most conventional lathes. This is due in part to the CNC drives being built into the machine. If you follow the instructions and experiment on some scrap stock, you will find that it is actually easier than the thread dial type machines. For you experienced machinists, however, you may have to make a mental note to "forget" the system you are used to before learning this one.

The principle of multiple pass threading consists of 2 important features;

1. **You must always start and stop your carriage at the same point along the X axis of the machine and,**
2. **you must always start each threading pass in the same position of the chuck rotation.**

If you miss either of these rules, you will not follow in the same path each time and end up "wiping" away your previous cuts.

In order to maintain your position along your carriage travel, you select your starting and stopping points and can simply set your X axis dial to 0 and count the turns, or if you have a Digital Readout system, set the 0 point and the stopping point. With your Shopmaster you have a more convenient way with the use of the auto stops on the X axis carriage. By adjusting the auto stops you can set the carriage to start and stop at the same point automatically. That establishes the first one of your 2 features.

Setting the rotational position of the chuck is as simple as making a reference mark on the chuck with felt pin or any device you prefer, and then making a corresponding mark somewhere on the machine body so that you can always bring the chuck mark around to meet the mark on the machine. You can even make a permanent pointer if you like.

Once the 2 main features are established, and assuming you have the proper threading tool and your center height is set etc., you are ready to make some test cuts.

CUTTING THE THREADS

1. **Turn on your machine and allow the carriage to run in reverse until the auto stop engages at the beginning point. (Even though your dial may read 0 at this point, it's a good idea to manually back the handle a few turns more and then come back to 0 each time to remove any back lash in the lead screw**

assembly. It's a good idea to have your starting point just beyond the end of your part.

2. Place the hi-low spindle brake lever into neutral being sure it is fully in the detent position and with the motor still running. Your chuck will now be stopped.
3. Bring the chuck around until your reference points are lined up.
4. Engage your lead screw shifter into the forward travel position .
5. Set the depth of your first cut on the Y axis table. (Have your dial locked to 0 so that you can easily read the depth and always return to 0. If you have a Digital Readout system, 0 your display and read your depths from the display screen.
6. Now you are ready for your first pass, you will note that you are starting at the reference mark on your chuck and the 0 point on your X axis carriage.
7. Engage the low speed on your hi-low spindle and allow the carriage to travel until the auto stop disengages it.
8. Now back your Y axis away from the part beyond your 0 point.
9. Engage your lead screw lever in the reverse position and allow the carriage to return to the starting point and allow the auto stop to disengage the carriage. Back the handle up and return to 0 as explained before.
10. Set the Y axis to the depth of your second cut.
11. Put your hi-low spindle lever into the neutral position and when the chuck is stopped, bring it around until your reference marks are lined up.
12. Put your lead screw shifter into the forward travel position again. You will now see that you are ready to start your second pass at the same point of the x axis carriage and rotation of the chuck. This insures that you will be cutting in the same "groove" as your first pass.
13. Engage your hi-low spindle and allow the carriage to make the second pass.
14. Continue repeating this routine until you have achieved the proper thread depth.

HELPFUL HINTS

Threading is a skill that must be learned and practiced, so do not be discouraged if you make some errors early on. It is important to have your tool at the proper height, and for smaller diameter parts use your tailstock with center or the follow rest to prevent deflection of the part. Always set your spindle to the lowest speed for threading. The "by the book" method is to set your tool at 29.5 degrees to the part, but for most everday jobs this is not necessary.

NOTES ON THE THREE JAW CHUCK

Your Shopmaster comes with a conventional 3-jaw chuck. Some also come with a 4-jaw chuck as an option. See the notes on the 4-jaw chuck in the next section. The normal 3-jaw chuck has three inside jaws and three outside jaws. Be sure to take careful note that all bolts that hold the chuck to it's face plate are tight and that the chuck fits properly in the face-plate recess made for it. The various parts of the chuck are an integral part of that particular chuck and should always maintained as a unit. Each chuck is manufactured as a unit and is dialed in with the jaws that are provided with the chuck. The serial number of each individual chuck is stamped on the body and on each of the jaws (see following illustration). The order in which the jaws go into the chuck is also critical to maintain accuracy. Note that the jaws are numbered 1, 2 and 3 as well as stamped with the serial number.
THE NUMBER ON THE CHUCK JAW, BOTH INSIDE AND OUTSIDE, INDICATE THE POSITION THAT THEY SHOULD BE PLACED IN THE CHUCK BODY. Jaw NO. 1 must go in the slot stamped NO. 1 on the chuck body. The same NO. 1 slot will also typically have the chuck serial number stamped immediately after the slot number. Make certain you follow the instructions for installation exactly.

INSTALLATION OF THE CHUCK JAWS

1. Using the chuck key provided, scroll to where the beginning of the scroll thread is visible in the NUMBER ONE slot, then back the thread off until the beginning of the thread is no longer visible in the slot (one-half turn counter clockwise will usually do it).

2. Next, insert the jaw numbered NO. 1 in the slot and firmly push it toward the center of the chuck.

3. Scroll the chuck until the thread becomes visible in the second slot; at this point pull out on the previously installed jaw to ensure that the scroll has engaged the teeth on the back of the jaw. If the jaw comes out, repeat steps 1 & 2. If the jaw holds proceed to step 4.

4. With the beginning of the thread visible in the second slot, again back it off one-half turn and insert the jaw. Push it firmly toward the center of the chuck.

5. Scroll the chuck until the thread becomes visible in the third slot;

pull out on 2nd jaw to ensure the scroll has engaged the teeth.

6. Repeat the steps for the third jaw.

WHEN ALL THE JAWS ARE INSTALLED AS INSTRUCTED ABOVE, THEY WILL MEET AT THE CENTER OF THE CHUCK SIMULTANEOUSLY.

TO RECAP THE PROCEDURE...

1. Jaws are inserted in numerical order 1-3.
2. Always begin with slot No. 1.
3. Scroll until the beginning of the thread is visible.
4. Install jaw, pushing it firmly toward center of chuck.
5. Scroll until the beginning of the thread is visible in the next slot.
6. Test the jaw just installed by pulling out.
7. Repeat from STEP 4 until all the jaws are firmly installed.
8. Scroll the chuck until all jaws meet in the center of the chuck.

IMPORTANT! IF ALL THE JAWS DO NOT MEET AT THE CENTER, REPEAT THE STEPS ABOVE AFTER REMOVING THE INCORRECTLY INSTALLED JAWS.

ILLUSTRATION # 7

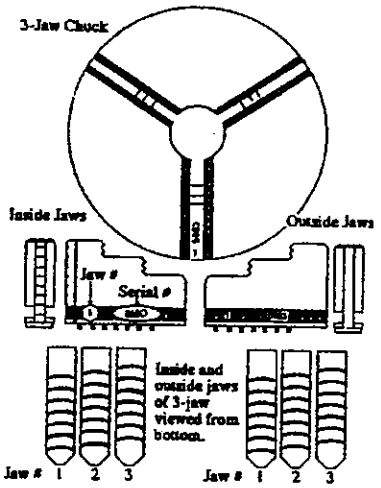

NOTE!

IF YOU LOSE THE JAWS YOU WILL HAVE TO BUY A COMPLETE NEW CHUCK-PARTS ARE <u>NOT</u> INTERCHANGABLE.

FACEPLATE MODIFICATION FOR THE FOUR JAW CHUCK.

Due to factory specification changes, please modify your faceplate according to the following instructions. Please refer to the following diagram for assistance.

1. Remove the three jaw chuck from the spindle.
2. Bolt the 8" face plate that came with your standard accessories to the spindle.
3. Cut away the existing shoulder that exists on your faceplate. This was used as a centering boss for an old-style chuck that is no longer available.
4. Make a cut across the surface of the face plate to true it to the spindle. Be sure to work slow to attain a ultra-smooth surface.
5. Cut away the face plate on the outside edge to create a new shoulder 0.200" high and 4.920" (125 mm) in diameter.
6. Test the fit of the 4-Jaw chuck to the face plate.
7. When the fit is snug, remove the face plate from the spindle.
8. Clamp the chuck to the face plate and mark the position of the four mounting holes.
9. Drill and tap holes to accept 5/16"-18 bolts supplied or any of your choice.

As always, do not be afraid to call the Shopmaster technical line for assistance.

ILLUSTRATION # 9
FACEPLATE MODIFICATION: SIDE VIEW

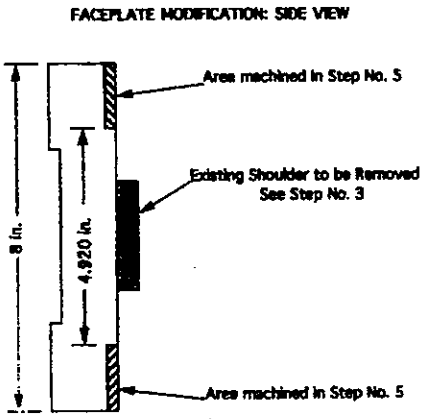

NOTES ON THE FOUR-JAW CHUCK

The 4-jaw chuck can be purchased as an option. Whether or not you need the extreme accuracy offered by a 4-jaw chuck is a decision that you need to make. Also, some units come with a machined installation plate while others come with plate which must be machined by you (this depends upon our suppliers). The diagram and instructions included at the back of this owner's manual will tell you how the plate must be machined to fit properly. It is not a very difficult procedure and might well qualify for your first serious project after you get set up and take a few practice cuts to familiarize you with your machine.

!!!CAUTION!!!

When performing any lathe work, please be sure to remove the chuck key from chuck BEFORE TURNING ON THE MACHINE! Serious injury can result if you carelessly leave the chuck key in the machine. It becomes a flying object of great speed due to the centrifugal force generated by the fast turning chuck.

A NOTE ON FEED RATES

For any machining exercise, certain parameters must first be calculated and set up on the machine, including RPM, FEED RATE, etc.. FEED is described as the machine movement that causes a tool to cut into or along the surface of a work piece. The amount of FEED is usually measured in thousandths of an inch when cutting metal. The most frequent recommendations regarding FEED RATES are .010 to .020 inches per revolution for rough machining and .003 to .005 inches per revolution for finish machining. Consultation of professional machinist manuals such as the **Machinist's Ready Reference** (ST 39 volume # 24) is highly recommended for detailed descriptions and tables that prove invaluable for nearly any machining operation. Contact the Shopmaster technical line for any other additional support you may need. See appendix for feed rate charts.

ELECTRICAL TROUBLESHOOTING

!!!When Checking Electrical System,
Always Disconnect Unit From The Power Source!!!

1. Neither motor will run-
A. Be sure unit is plugged in.
B. Check your outlet with an electrical tester to be sure it is "hot".
C. Ensure electrical breaker hasn't been tripped.
D. Check the cord connections to the machine.
E. Check the connections from the junction block to the switches.

2. Only one motor runs-
A. Check all connections on inoperable motor junction block both top and bottom sides.
B. Check connections of wires on switch.
C. Check connections of wires from switch to cord junction block.

3. Motor runs only one direction-
A. Check all connections on junction box.
B. Check connections from switch to motor.
C. Check switch contacts.
D. If it is the MILL motor which only runs in one direction, check to see if the chrome jumper tabs were removed from the terminal block.

4. Motor runs slowly-
A. Check capacitor connections. If all are secure, switch capacitors from other motor. If this solves the problem, then the capacitors are faulty and should be replaced. Call Shoptask technical line for assistance.

5. Motor hums but does not turn-
A. Check capacitor connections.

6. Motor starts and stops constantly-
A. Check capacitor connections.
B.Check capacitor for damage, if all appears fine, switch capacitors from other motor. If this solves the problem, then the capacitors are faulty and should be replaced. Call Shoptask technical line for assistance.
C. Check spindle pre-load. Loosen if it appears too tight. Remember it works on the same principle a car wheel bearing does.

!!!CAUTION!!!

Do not allow motor to run slowly or intermittently. This can cause windings to burn out and VOIDS YOUR WARRANTY then the motor must be returned to Shopmaster for repair.

7. Motor runs but makes noise-
A. Check housing around the cooling fan for looseness or dents.
B. Check drive pulley and belts for tightness.
C. Check motor mount and bolts for tightness.

8. Motor runs fine, but seems too hot-
Note! Motors are designed for 110V current. In normal systems, the current can very from 105 to 125 volts. If your line is on the "high" side (over110V) then the motor will run hotter. Use of a voltage regulator can solve this problem. These are sold in hardware stores and often referred to as "green plugs". They are used to reduce consumption on appliances such as refrigerators.

MACHINE TROUBLESHOOTING

1. Too much backlash on table-
A. Check brass nuts on the lead screw for adjustment and tightness.
B. Check the set screws holding the lead screw nuts on the carriage and cross slide.
C. Check tightness of Cross Slide Handle.

2. Table loose on ways-
A. Adjust gibs.
B. Check compound lock nuts for tightness.

3. Spindle works on low speed but stalls on high-
A. Check pre-load on spindle bearings.
B. Check bearings for proper lubrication.
C. Check belt tension.

LUBRICATION OF THE UNIT

For accurate work, machinery must be properly lubricated. To achieve this, it is important to use the proper oil (10W oil) at the proper time intervals. The lubrication diagram gives the minimum requirements but might need some clarification. For example, ITEM 1 HEAD STOCK, is probably the most important as well as the most complicated. Take time to examine the CLEAR PLASTIC PORT located below the lathe spindle. It is called the GEAR BOX SIGHT GLASS. It is important to add only enough oil to become visible in the sight glass when the lathe is running. If needed, add oil by unscrewing the slotted plug that is located on the gearbox inspection plate which is just above the LATHE motor on the back of the machine. DO NOT OVERFILL. Another important item is to make sure the lathe bed ways are lubricated each time you use the unit. Oil all "button" oilers daily. Use a lightweight lithium grease on gears. The lead screws for the lathe and the cross slide must not be ignored. Using an oil can, lubricate both lead screws while they are in motion. To easily oil the cross slide, move the table toward you as far as it

reaches and squirt a generous amount onto the screw as you turn the handwheel to move the table back away from you.
Annually the machine should be disassembled to the point where the lathe and mill taper bearings can be re-packed in grease. We recommend a durable wheel bearing grease that is obtained at any auto parts store. Remember to adjust the pre-load carefully upon reassembly.
Please also note that grease may collect metal shavings and could cause excessive wear to the gearbox assembly. This may be true if the chips can enter the gear area. We suggest using tape to block all holes which would allow chips to enter the gear area.

ILLUSTRATION # 8

Lubrication Chart:

Item	Name	Location	Method	Lubrication	How Often
1	Head Stock	Gears and Bearings	Oil Splash	Machine Oil	Constant
2	Cross Slide	Lead Screw	Oil Gun	Machine Oil	Daily
3	Change Gears	Gears	Oil Gun	Machine Oil	Daily
4	Tailstock	Barrel	Oil Gun	Machine Oil	Daily
5	Lead Screw	Screw	Oil Gun	Machine Oil	Daily
6	Carriang	Cross Feed Screw	Oil Gun	Machine Oil	Daily
7	Drill/mill Headstock	Worm Gear	Oil Gun	Machine Oil	Daily

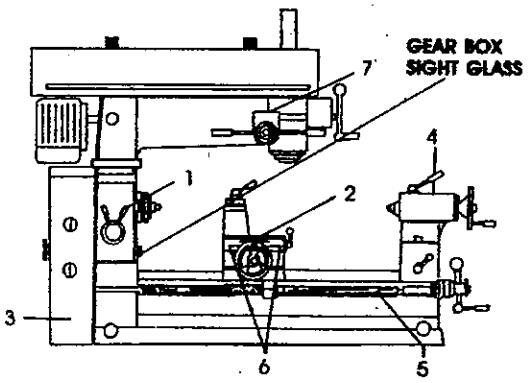

SPARE PARTS MANUAL

SHOPMASTER

MODELS

2000 AND ELDORADO

TABLE OF CONTENTS

Fig.1

Drilling-milling spindle pulley shell

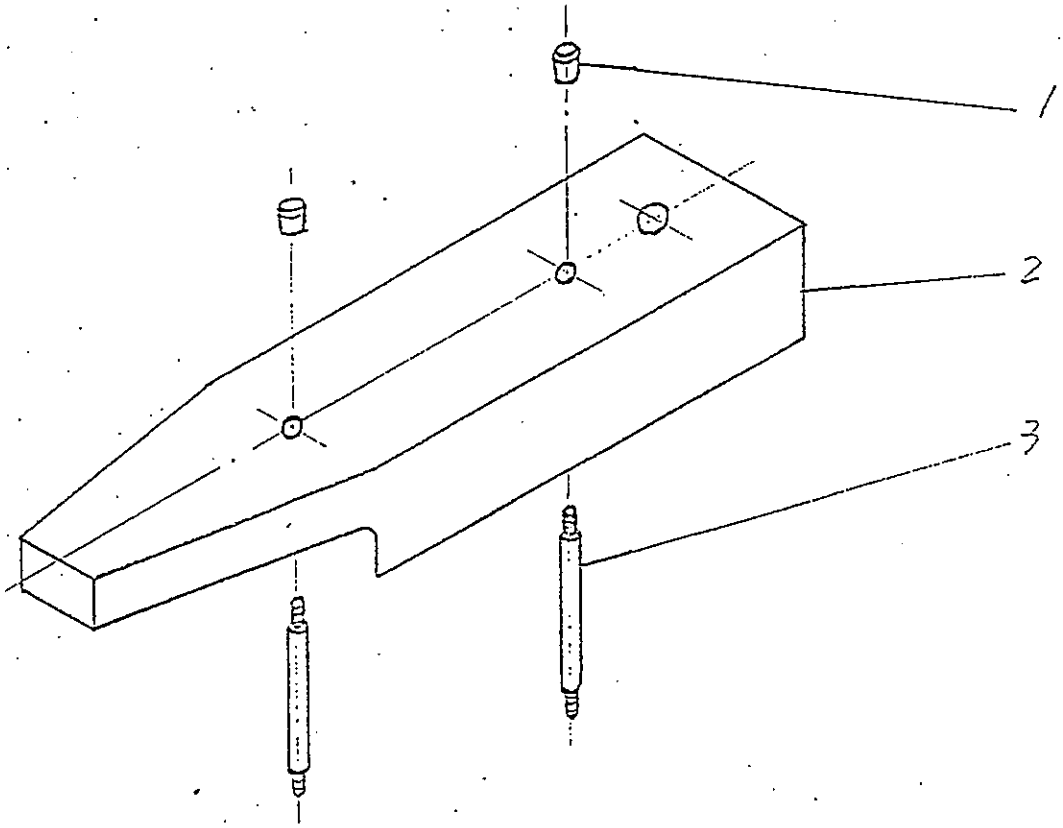

NO.	NAME	PART NO.	SPECIFICATIONS	MATERIAL	QUANTITY
1	Long Sleeve Knob	DG400CNC—01—26		Phenolic	2
2	Pulley Shell	DG400CNC—E—02—04		A3	1
3	Stud	DG400CNC—02—03		A3	2

Fig.2

Drilling-milling head

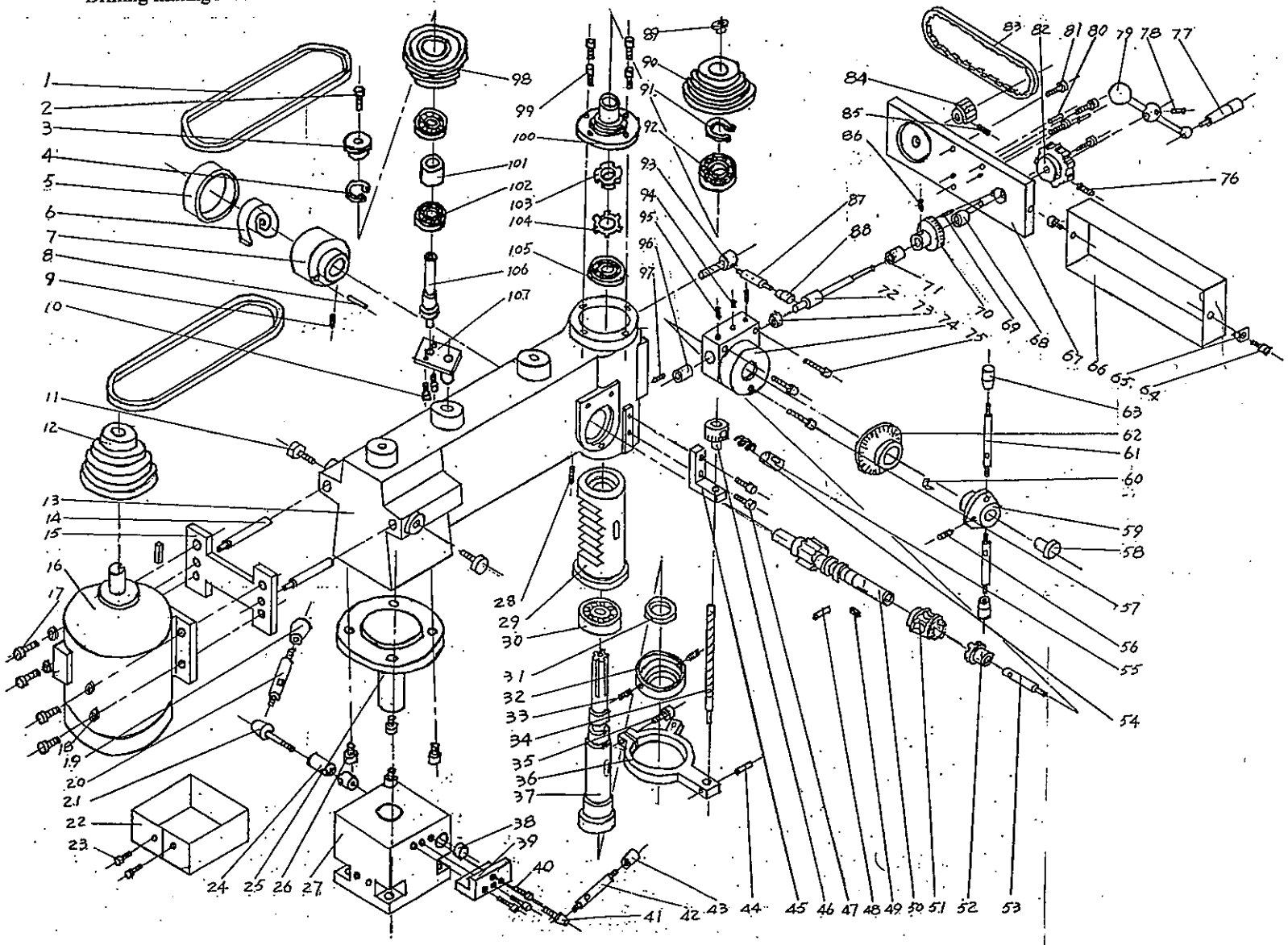

Fig.2

Drilling-milling head

NO.	NAME	PART NO.	SPECIFICATIONS	MATERIAL	QUANTITY
1	V-belt		GB1171-74 O-850		2
2	Slotted countersunk head screw		GB819-85 M5×10		1
3	Lock ring	DG400CNC-02-51		A3	1
4	Circlip for hole		GB893.1-86 42		1
5	Spring cap	DG400CNC-02-34		Phenolic	1
6	Spring lamination	DG400CNC-02-31		65Mn	1
7	Seat	DG400CNC-02-33		HT20-40	1
8	Taper pin with internal screw		GB118-86 A5×25		1
9	Hexagon socket set screw with cone point		GB78-85 M6×16		1
10	Hexagon socket cap head screw		GB70-85 M5×10		2
11	Screw	DG400CNC-02-47		45	2
12	Motor pulley	DG400CNC-02-02		HT15-33	1
13	Drilling-milling head box	DG400CNC-D-02-01		HT20-40	1
14	Shaft	DG400CNC-02-48		45	2
15	Frame of motor	DG400CNC-02-49		HT15-33	1
16	Motor		YL8014 750W 110V/60HZ		1

Fig.2

Drilling-milling head

NO.	NAME	PART NO.	SPECIFICATIONS	MATERIAL	QUANTITY
17	Hexagon head bolt		GB5780-86 M8×25		4
18	Plain washer		GB97.2-85 -140HV ϕ8		4
19	Long sleeve knob	DG400CNC-01-21		Phenolic	1
20	Handle lever	DG400CNC-01-22		45	1
21	screw	DG400CNC-02-10		A3	1
22	Close board	DG400CNC-02-30		aluminium sheet	1
23	Hexagon socket cap head screw		GB70-85 M6×10		2
24	Locking piece	DG400CNC-02-11		45	1
25	Turning shaft	DG400CNC-02-27		45	1
26	Hexagon socket cap head screw		GB70-85 M10×25		4
27	Base	DG400CNC-E-02-29		HT20-40	1
28	Slotted set screw with long dog point		GB79-85 M8×16		1
29	Spindle sleeve	DG400CNC-02-16		45	1
30	Single-row tapered roller bearing		GB297-84 E2007107		1
31	Felt collar			Felt	1
32	Bearing cap	DG400CNC-D-02-18		HT15-33	1

Fig.2

Drilling-milling head

NO.	NAME	PART NO.	SPECIFICATIONS	MATERIAL	QUANTITY
33	Slotted set screw with cone point		GB71-58 M5×6		2
34	Spacing screw rod	DG400CNC-E-02-54		45	1
35	Hexagon socket cap head screw		GB70-85 M6×20		1
36	Spacing ring	DG400CNC-E-02-52		ZG25	1
37	Drilling—milling spindle	DG400CNC-02-08		45	1
38	Hole plug	DG400CNC-02-13		HT15-33	1
39	Positional seat	DG400CNC-E-02-28		A3	1
40	Hexagon socket cap head screw		GB70-85 M6×35		3
41	Handle seat	DG400CNC-02-46		45	1
42	Handle lever	DG400CNC-01-22		45	1
43	Long sleeve knob	DG400CNC-01-21		phenolic	
44	Taper pin		GB117-86 A3×26		1
45	Spacing rack	DG400CNC-E-02-53		A3	1
46	Graduation nut	DG400CNC-E-03-42		45	1
47	Hexagon socket cap head screw		GB70-85 M6×20		2
48	parallel pin		GB119-86 B5×28		1

Fig.2

Drilling-milling head

NO.	NAME	PART NO.	SPECIFICATIONS	MATERIAL	QUANTITY
49	Plain parallel key		GB1096-79 5×16		1
50	Gear shaft	DG400CNC-02-32		45	1
51	Worm gear	DG400CNC-02-45		ZQSn6-6-3	1
52	Clutch sleeve	DG400CNC-02-38		45	1
53	Small shaft	DG400CNC-02-41		A3	1
54	Spring	DG400CNC-E-03-41		65Mn	1
55	Press piece	DG400CNC-E-03-40		45	1
56	Hexagon socket set screw with cone point		GB78-85 M6×12		1
57	Hexagon socket cap head screw		GB70-85 M5×50		1
58	Long handle knob	DG400CNC-02-42		phenolic	1
59	Handle seat	DG400CNC-02- 40		A3	1
60	Spring lamination	DG400CNC-01-18		65Mn	1
61	Handle lever	DG400CNC-02-26		45	2
62	Dial	DG400CNC-02-44		A3	1
63	Long sleeve knob	DG400CNC-01-26		phenolic	2
64	Hexagon socket cap head screw		GB70-85 M5×10		2

Fig.2

Drilling-milling head

NO.	NAME	PART NO.	SPECIFICATIONS	MATERIAL	QUANTITY
65	Pointer	DG400CNC-D-02-58		aluminum sheet	1
66	Shell	DG400CNC-02-36		A3	1
67	Board	DG400CNC-02-12		A3	1
68	Copper sleeve	DG400CNC-02-50		ZQSn6-6-3	1
69	Slotted set screw with cone point		GB71-85 M4×6		1
70	Dial	DG400CNC-E-02-57		45	1
71	Sleeve	DG400CNC-02-14		HT15-33	1
72	Worm	DG400CNC-02-25		45	1
73	Washer	DG400CNC-02-23		A3	1
74	Worm seat	DG400CNC-02-37		HT20-40	1
75	Hexagon socket cap head screw		GB70-85 M5×35		2
76	Hexagon socket set screw with cone point		GB78-85 M5×16		1
77	Handle with sleeve	DG400CNC-01-24		45	1
78	Taper pin		GB117-86 A4×25		1
79	Handle seat	DG400CNC-01-25		45	1
80	Taper pin with internal screw		GB118-86 A5×20		2

Fig.2

Drilling-milling head

NO.	NAME	PART NO.	SPECIFICATIONS	MATERIAL	QUANTITY
81	Hexagon socket cap head screw		GB70-85 M8×16		4
82	Teeth profile pulley	DG400CNC-02-39		45	1
83	Synchronous tooth profile belt		200XL037 1.617×100×10		1
84	Teeth profile pulley	DG400CNC-01-96		45	1
85	Hexagon socket set screw with flat point		GB77-85 M5×10		1
86	Hexagon socket set screw with flat point		GB77-85 M5×5		1
87	Handle lever	DG400CNC-01-22		45	1
88	Long sleeve knob	DG400CNC-01-21		phenolic	1
89	Sleeve	DG400CNC-D-02-59		A3	1
90	Main shaft pulley	DG400CNC-02-09		HT15-33	1
91	External snap ring		GB894.1-96 ϕ40		1
92	Radial ball bearing		GB276-82 108		1
93	Screw	DG400CNC-02-35		A3	1
94	oil cup		GB1155-79 6		1
95	Hexagon socket set screw with cone point		GB78-85 M6×16		2
96	Sleeve	DG400CNC-02-24		HT15-33	1

Fig.2

Drilling-milling head

NO.	NAME	PART NO.	SPECIFICATIONS	MATERIAL	QUANTITY
97	Hexogon socket cap head screw		GB79-85 M8×16		1
98	Middle pulley	DG400CNC-02-22		HT15-33	1
99	Hexagon socket cap head screw		GB70-85 M5×18		4
100	Bearing cap	DG400CNC-02-05		HT15-33	1
101	Sleeve	DG400CNC-01-08		A3	1
102	Radial ball bearing		GB276-82 104		2
103	Round nut		GB812-88 M30×1.5		1
104	Lock washer for circular nut		GB858-88 ϕ30		1
105	Single-row tapered roller bearing		GB297-84 E2007106		1
106	Shaft	DG400CNC-02-19		45	1
107	Rocker arm			A3 45	1

Fig.3

Lathe head

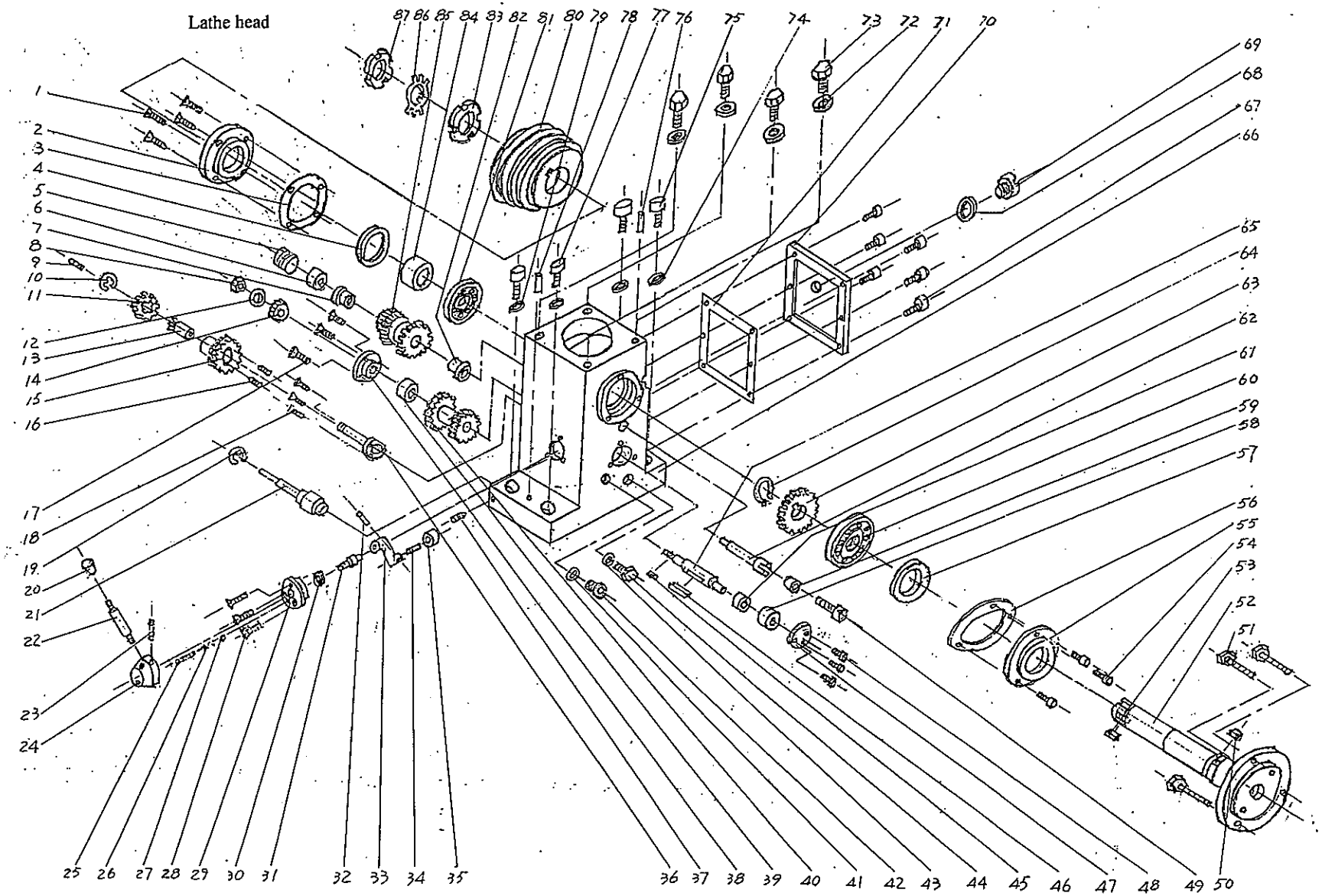

Fig.3

Lathe head

NO.	NAME	PART NO.	SPECIFICATIONS	MATERIAL	QUANTITY
1	Cross recessed countersunk head screw		GB68-85 M6×16		4
2	Rear bearing oil seal	DG400CNC-01-34		HT15-33	1
3	Packing paper	DG400CNC-D-01-117		brown paper	1
4	Felt collar		JB/ZQ4606-86		1
5	Hexagon socket set screw with flat point		GB77-85 M24×20		1
6	Shaft sleeve	DG400CNC-01-35		A3	1
7	Shaft sleeve	DG400CNC-01-41		ZQSn6-6-3	1
8	Hexagon nut		GB6170-86 M10		1
9	Oil cup		GB1155-79 6		1
10	"E" ring		GB896-86 Φ9		1
11	(A) Chang gear	DG400CNC-05-04	Z=30	45	1
12	Plain washer		GB97.2-85-140HV Φ10		1
13	Shaft sleeve	DG400CNC-01-65		45	1
14	Gear	DG400CNC-01-66		45	1
15	Gear	DG400CNC-01-49		45	1
16	Slotted set screw with flat point		GB73-85 M4×6		2

Fig.3

Lathe head

NO.	NAME	PART NO.	SPECIFICATIONS	MATERIAL	QUANTITY
17	Cross recessed countersunk head screw		GB819-85 M5×10		3
18	Cross recessed countersunk head screw		GB819-85 M5×10		3
19	"E" ring		GB896-86 φ9		1
20	Long handle knob	DG400CNC-01-21		phenolic	1
21	Shaft	DG400CNC-D-01-60		45	1
22	Handle lever	DG400CNC-01-22		45	1
23	Taper pin		GB117-86 A5×50		1
24	Handle seat	DG400CNC-01-89		A3	1
25	Hexagon socket cap head screw		GB79-85 M8×16		1
26	Spring		GB2089-80 II 0.6×6×20		1
27	Steel ball		GB308-84 φ6		1
28	Cross recessed countersunk head screw		GB68-85 M5×12		3
29	End cap	DG400CNC-01-90		45	1
30	O-Seal ring		GB3452.1-82 10.6×2.65		1
31	Control shaft	DG400CNC-01-91		45	1
32	Taper pin		GB117-86 A4×20		1

Fig.3

Lathe head

NO.	NAME	PART NO.	SPECIFICATIONS	MATERIAL	QUANTITY
33	Sifting yoke	DG400CNC-01-92		HT15-33	1
34	Parallel pin		GB119-86 B8×26		1
35	Loose piece	DG400CNC-01-93		A3	1
36	Shaft	DG400CNC-01-48		45	1
37	Hexagon socket set screw with cone point		GB78-85 M6×10		1
38	End cop	DG400CNC-01-67		HT15-33	1
39	Shaft sleeve	DG400CNC-01-46		A3	1
40	Duplex gear	DG400CNC-01-47		45	1
41	O-Seal ring		GB3452.1-82 16×2.65		1
42	Fuel level indicator		GB1160.2-89 10		1
43	O-Seal ring		GB3452.1-82 16×2.65		1
44	Plug screw	DG400CNC-01-98		45	1
45	Plain parallel key				1
46	Plain parallel key		GB1096-79 4×10		1
47	End cap	DG400CNC-01-43		HT15-33	1
48	Hexagon socket cap head screw		GB70-85 M5×10		3

Fig.3

Lathe head

NO.	NAME	PART NO.	SPECIFICATIONS	MATERIAL	QUANTITY
49	Hexagon socket cap head screw		GB70-85 M8×30		1
50	Plain parallel key		GB1096-79 6×10		1
51	Hexagon head bolt		GB5780-86 M8×25		3
52	Lathe spindle	DG400CNC-01-38		45	1
53	Plain parallel key		GB1096-79 6×20		1
54	Hexagon socket cap head screw				3
55	Front bearing oil seal	DG400CNC-01-37(A)		A3	1
56	Packing paper	DG400CNC-D-01-116		brown paper	1
57	Seal		GB9877.1-88 B45 62 8		1
58	Shaft nose	DG400CNC-01-46		HT15-33	1
59	Shaft sleeve	DG400CNC-01-42		A3	1
60	Single-row tapered rolled bearing		DG297-84 E2007108		1
61	Adjust sleeve	DG400CNC-01-45		A3	1
62	Shaft	DG400CNC-01-40		45	1
63	Spindle gear	DG400CNC-01-36		45	1
64	External snap ring		GB894.1-86 Φ36		1

Fig.3

Lathe head

NO.	NAME	PART NO.	SPECIFICATIONS	MATERIAL	QUANTITY
65	Gear shaft	DG400CNC-01-44		45	1
66	Lathe head	DG400CNC-01-06		HT20-40	1
67	Hexagon socket cap head screw		GB70-85 M6×16		6
68	Rubber ring	DG400CNC-01-70		black rubber	1
69	Plug screw	DG400CNC-01-71			1
70	Blind flange	DG400CNC-01-74		HT15-33	1
71	Packing paper	DG400CNC-01-69		brown paper	1
72	Spring washer		GB93-87 ϕ10		4
73	Hexagon head bolt		GB5780-86 M10×30		4
74	Spring washer		GB93-87 ϕ10		2
75	Hexagon socket cap head screw		GB70-85 M10×25		2
76	Taper pin with Internal screw		GB118-86 A8×40		1
77	Hexagon socket cap head screw		GB70-85 M10×40		2
78	Taper pin with Internal screw		GB118-86 A8×40		1
79	Spring washer		GB93-87 ϕ10		2
80	Spindle pulley	DG400CNC-E-01-32		HT15-33	1

Fig.3

Lathe head

NO.	NAME	PART NO.	SPECIFICATIONS	MATERIAL	QUANTITY
81	Single-row tapered rolled bearing	DG400CNC-01-41	GB297-84 E2007107		1
82	Sleeve			ZQSn6-6-3	1
83	Round nut		GB812-88 M35×1.5		1
84	Sleeve	DG400CNC-01-33		45	1
85	Triple gear	DG400CNC-01-39		45	1
86	Lock washer for circle lar nut		GB858-88 ϕ35		1
87	Round nut		GB812-88 M35×1.5		1

Fig.4

Bed.

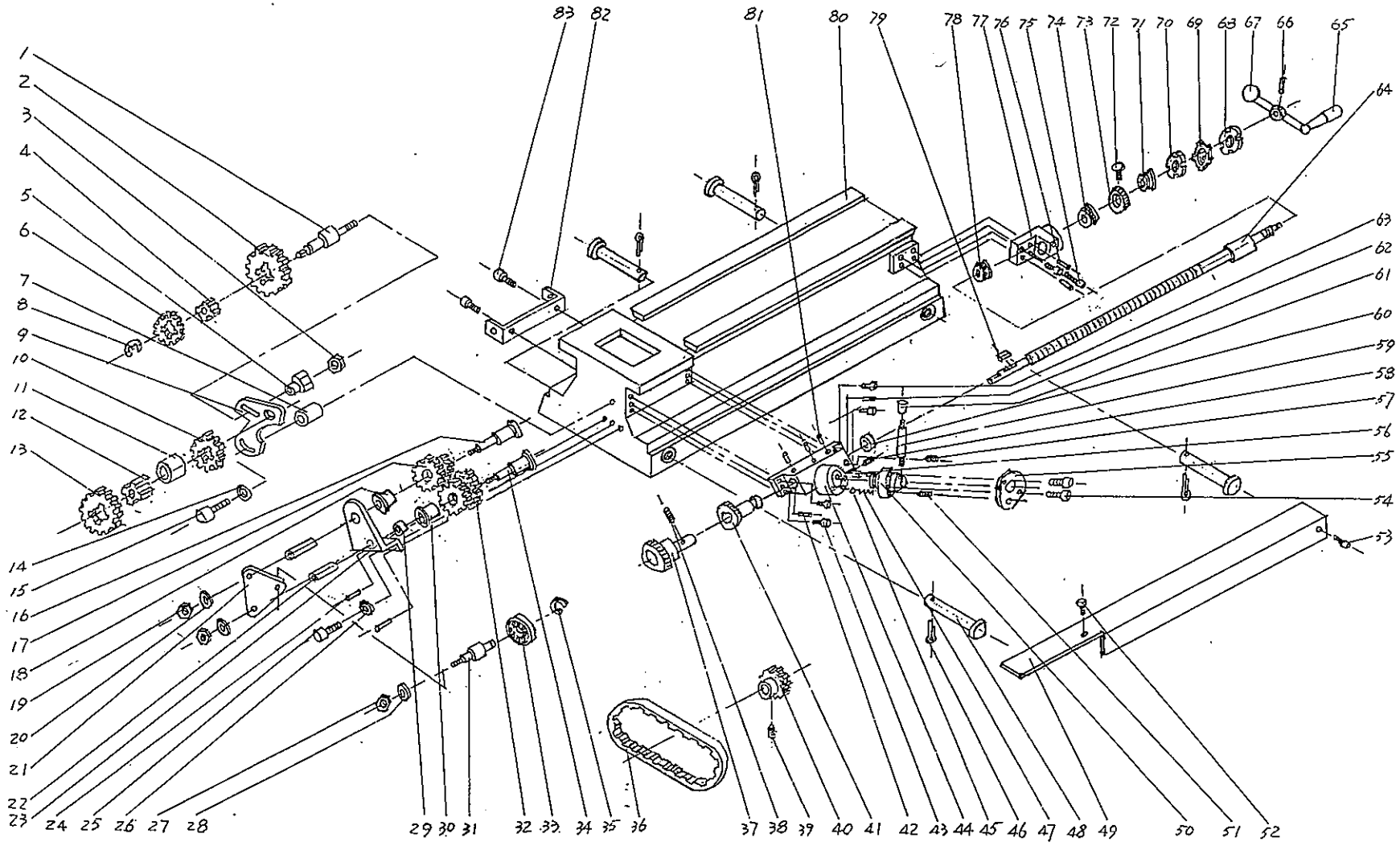
1
2
3
4
5
6
7
8
9
10
11
12
13
14
15
16
17
18
19
20
21
22
23
24
25
26
27
28
29
30
31
32
33
34
35
36
37
38
39
40
41
42
43
44
45
46
47
48
49
50
51
52
53
54
55
56
57
58
59
60
61
62
63
64
65
66
67
68
69
70
71
72
73
74
75
76
77
78
79
80
81
82
83

Fig.4

Bed

NO.	NAME	PART NO.	SPECIFICATIONS	MATERIAL	QUANTITY
1	Change gear shaft	DG400CNC-D-01-53		45	1
2	(B) Change gear	DG400CNC-05-04	Z=60	A3	1
3	Hexagon nut		GB6170-86 M8		1
4	Spline housing	DG400CNC-01-52		45	1
5	T-nut	DG400CNC-D-01-51		45	1
6	(C) Change gear	DG400CNC-05-04	Z=27	A3	1
7	Sleeve	DG400CNC-01-31		A3	1
8	"E" ring		GB896-86 Φ9		1
9	Change gear plate	DG400CNC-D-01-54		45	1
10	Gear	DG400CNC-01-63		45	1
11	Sleeve	DG400CNC-D-01-64		A3	1
12	Spline sleeve	DG400CNC-D-01-62		45	1
13	(D) Change gear	DG400CNC-05-04	Z=63	A3	1
14	Check ring	DG400CNC-01-61		A3	1
15	Hexagon socket cap head screw		GB70-85 M8×40		1
16	Small shaft	DG400CNC-E-01-105		45	1

Fig.4

Bed

NO.	NAME	PART NO.	SPECIFICATIONS	MATERIAL	QUANTITY
17	Duplex gear	DG400CNC-D-01-103		45	1
18	Copper sleeve	DG400CNC-D-01-102		ZQSn6-6-3	1
19	Hexagon nut		GB 6170-86 M6		2
20	Plain washer		GB97.2-85-Φ6		2
21	Location plate	DG400CNC-E-01-161		45	1
22	Sleeve	DG400CNC-E-01-160		45	1
23	Stand	DG400CNC-D-01-161		45	1
24	Taper pin with internal screw		GB118-86 A6×20		2
25	Hexagon socket cap head screw		GB70-85 M8×20		1
26	Plain washer		GB97.2-85-140HV Φ8		1
27	Hexagon nut		GB 6170-86 M6		1
28	Plain washer		GB97.2-85-140HV Φ6		1
29	Sleeve	DG400CNC-D-01-100		45	1
30	Copper sleeve	DG400CNC-D-01-102		ZQSn6-6-3	1
31	Shaft	DG400CNC-E-01-162		45	1
32	Duplex gear	DG400CNC-D-01-103		45	1

Fig.4

Bed

NO.	NAME	PART NO.	SPECIFICATIONS	MATERIAL	QUANTITY
33	Radial ball bearing		GB276-82 100		1
34	Small shaft	DG400CNC-E-01-99		45	1
35	External snap ring		GB894.1-86 ϕ10		1
36	Synchronous tooth profile belt				1
37	Tooth profile pulley	DG400CNC-E-01-55		45	1
38	Hexagon socket set screw with flat point		GB77-86 M6×6		1
39	Hexagon socket set screw with flat point		GB77-86 M5×10		1
40	Tooth profile pulley	DG400CNC-01-96		A3 45	1
41	Tooth shaft	DG400CNC-D-01-110		45	1
42	Taper pin with internal screw		GB118-86 A5×20		1
43	Hexagon socket cap head screw		GB70-85 M6×15		2
44	Handle fastener	DG400CNC-D-01-108		HT15-33	1
45	Steel ball		GB308-84 ϕ6		1
46	Straight pin		GB91-86 4×35		4
47	Spring		GB2089-80 II 0.6×6×20		1
48	Shaft	DG400CNC-01-83		A3	4

Fig.4

Bed

NO.	NAME	PART NO.	SPECIFICATIONS	MATERIAL	QUANTITY
49	Cover	DG400CNC-E-01-88		A3	1
50	Eccentric shaft	DG400CNC-E-01-109		45	1
51	Hexagon socket cap head screw		GB79-85 M8×16		1
52	Hexagon socket cap head screw		GB70-85 M5×10		1
53	Hexagon socket cap head screw		GB70-85 M5×10		1
54	Hexagon socket cap head screw		GB70-85 M5×12		1
55	Push block	DG400CNC-E-01-138		A3	1
56	Copper sleeve	DG400CNC-D-01-107		ZQSn6-6-3	1
57	Hexagon socket set screw with flat point		GB78-85 M5×10		1
58	Hexagon socket set screw with flat point		GB78-85 M6×10		1
59	Handle lever	DG400CNC-01-22		45	1
60	Copper sleeve	DG400CNC-D-01-106		ZQSn6-6-3	1
61	Long handle knob	DG400CNC-01-21		phenolic	1
62	Taper pin with internal screw		GB118-86 A5×20		1
63	Hexagon socket cop head screw		GB70-85 M6×15		2
64	Lengituidinal feed screw	DG400CNC-D-01-87		Y40Mn	1

Fig.4

Bed

NO.	NAME	PART NO.	SPECIFICATIONS	MATERIAL	QUANTITY
65	Handle with sleeve	DG400CNC-01-24		45	1
66	Taper pin		GB117-86 A4×25		1
67	Handle seat	DG400CNC-01-25		45	1
68	Round nut		GB812-88 M14×1.5		1
69	Lock washer for circular nut		GB858-88 ϕ14		1
70	Round nut		GB812-88 M14×1.5		1
71	Sleeve	DG400CNC-01-84		45	1
72	Dial location screw	DG400CNC-E-01-124		45	1
73	Dial	DG400CNC-E-01-85		45	1
74	Thrust ball bearing		GB301-84 8012		1
75	Hexagon socket cap head screw		GB70-85 M6×15		2
76	Taper pin with internal screw		GB118-86 A5×20		2
77	Bearing frame	DG400CNC-01-86		HT15-33	1
78	Thrust ball bearing		GB301-84 8012		1
79	Plain parallel key		GB1096-79 5×20		1
80	Bed	DG400CNC-E-01-01		HT25-47	1

Fig.4

Bed

NO.	NAME	PART NO.	SPECIFICATIONS	MATERIAL	QUANTITY
81	Oil cup		GB1155-76 6		3
82	Pedestal	DG400CNC-01-80		A3	1
83	Hexagon socket cap head screw		GB70-85 M8×16		2

Fig.5

Tail-sock

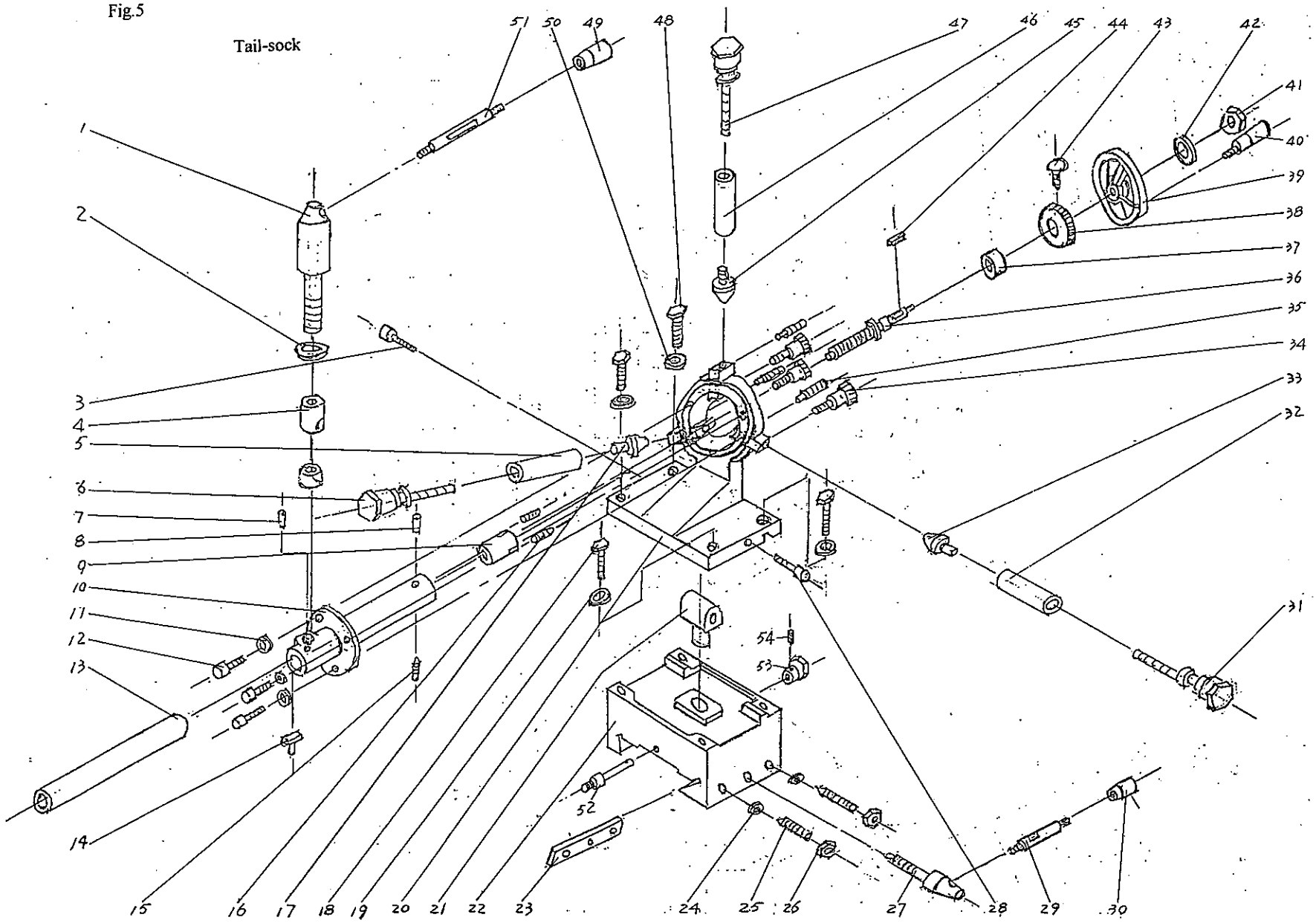

Fig.5

Tail-sock

NO.	NAME	PART NO.	SPECIFICATIONS	MATERIAL	QUANTITY
1	Handle seat	DG400CNC-E-01-28		45	1
2	Washer	DG400CNC-01-29		A3	1
3	Hexagon socket cap head screw		GB70-85 M10×85		1
4	Locking sleeve	DG400CNC-01-30		45	1
5	Guide rod.	DG400CNC-E-01-120		45	1
6	Adjust screw	DG400CNC-E-01-119		45	1
7	Oil cup		Gb1155-79 6		1
8	Oil cup		Gb1155-79 6		1
9	Tailsock nut	DG400CNC-D-01-14		ZQSn6-6-3	1
10	Tailsock-center sleeve	DG400CNC-E-01-123		HT20-40	1
11	Plain washer		Gb97.2-85 M8×30		3
12	Hexagon socket cap head screw				3
13	Tailsock-center sleeve	DG400CNC-E-01-12		45	1
14	T-key	DG400CNC-01-11		45	1
15	Hexagon socket set screw with cone point		Gb78-85 M6×10		1
16	Slotted set screw with flat point		Gb73-85 M4×6		2

Fig.5

Tail-sock

NO.	NAME	PART NO.	SPECIFICATIONS	MATERIAL	QUANTITY
17	touch head	DG400CNC-E-01-121		ZQSn6-6-3	1
18	Hexagon head bolt		GB5780-86 M8×40		2
19	Washer	DG400CNC-E-01-118		A3	2
20	Tailsock base	DG400CNC-E-01-13		HT20-40	1
21	Adjust nut	DG400CNC-01-72		HT15-33	1
22	Trail-seat base	DG400CNC-E-01-97		HT20-40	1
23	Chock	DG400CNC-01-82		45	1
24	Plain washer		GB97.2-85-140HV Φ8		2
25	Hexagon socket set screw with cone point		GB78-85 M8×50		2
26	Hexagon nut		GB6170-86 M8		2
27	Handle	DG400CNC-01-23		45	1
28	Hexagon socket cap head screw		GB70-85 M10×85		1
29	Handle lever	DG400CNC-01-22		45	1
30	Long handle knob	DG400CNC-01-21		Phenolic	1
31	Adjust screw	DG400CNC-E-01-119		45	1
32	Guide rod	DG400CNC-E-01-120		45	1

Fig.5

Tail-sock

NO.	NAME	PART NO.	SPECIFICATIONS	MATERIAL	QUANTITY
33	Touch head	DG400CNC-E-01-121		ZQSn10-1	1
34	Lock screw	DG400CNC-E-01-122		45	3
35	Hexagon socket cap head screw		GB79-85 M6×10		3
36	Tail-seat screw	DG400CNC-E-01-15		45	1
37	Sleeve	DG400CNC-E-01-16		HT15-33	1
38	Dial	DG400CNC-E-01-17		45	1
39	Hand wheel	DG400CNC-E-01-19		HT15-33	1
40	Handle with sleeve	DG400CNC-01-20		45	1
41	Hexagon nut				1
42	Washer		GB97.2-85-140HV ϕ10		1
43	Dial adjust screw	DG400CNC-E-01-124		45	1
44	Plain parallel key		GB1096-79 4×12		1
45	Touch head	DG400CNC-E-01-121		ZQSn10-1	1
46	Guide rod	DG400CNC-E-01-120		45	1
47	Adjust screw	DG400CNC-E-01-119		45	1
48	Hexagon head bolt		GB5780-86 M8×40		2

Fig.5

Tail-sock

NO.	NAME	PART NO.	SPECIFICATIONS	MATERIAL	QUANTITY
49	Tailsock screw stem	DG400CNC-01-26		Phenolic	1
50	Washer	DG400CNC-01-29		A3	1
51	Handle lever	DG400CNC-01-27		45	1
52	Tailsock rod	DG400CNC-E-01-117		45	1
53	Hexagon head	DG400CNC-E-01-116		45	1
54	Hexagon socket set screw with cone point		GB78-85 M5×8		1

Fig.6

Carriage

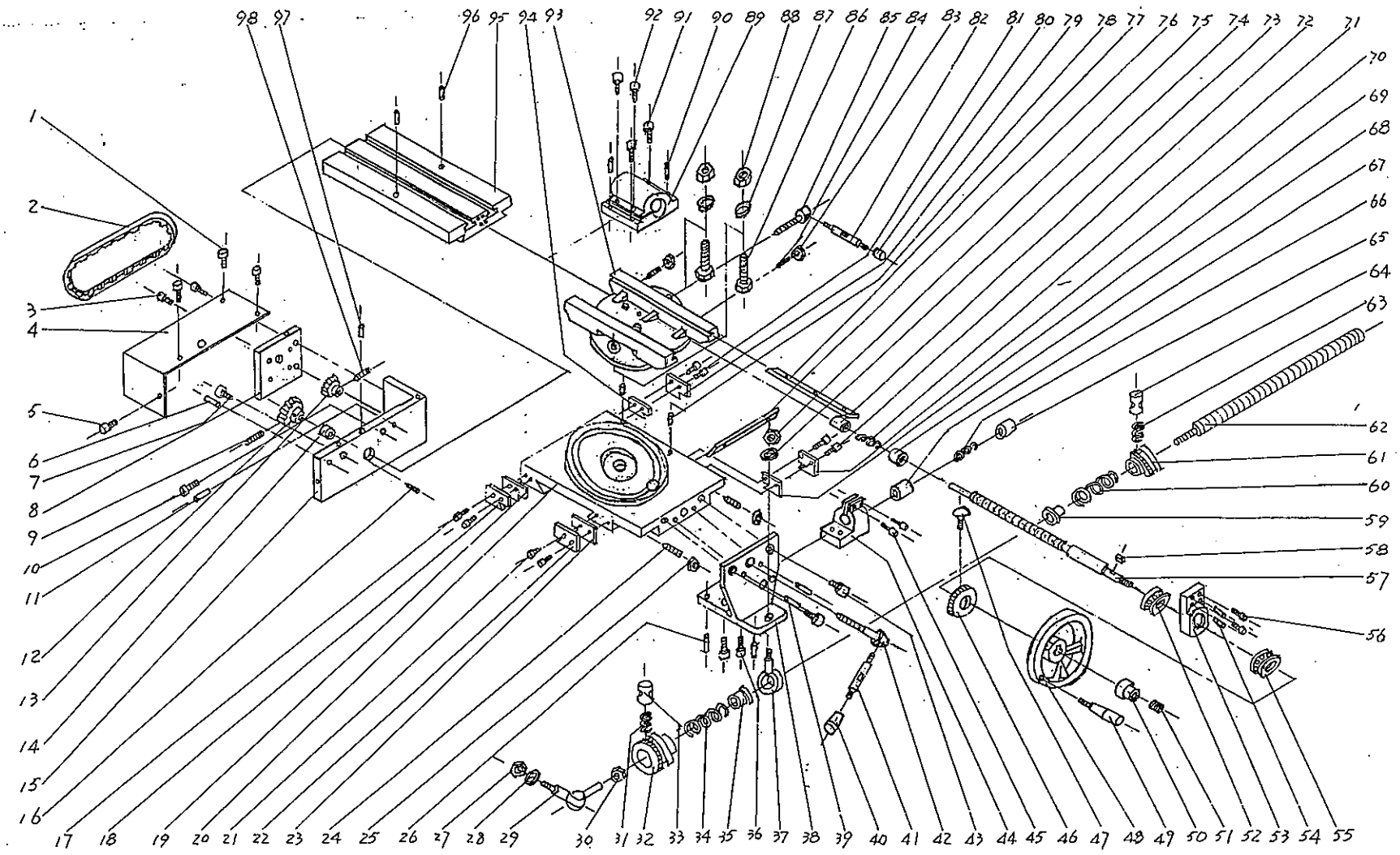

Fig. 6

Carriage

NO.	NAME	PART NO.	SPECIFICATIONS	MATERIAL	QUANTITY
1	Hexagon socket cap head screw		GB70-85 M5×10		3
2	Synchronous tooth profile belt		120×1037 (1.617×60×10)		
3	Hexagon socket cap head screw		GB70-85 M8×16		2
4	Pulley shell	DG400CNC-01-19		A3	1
5	Hexagon socket cap head screw		GB70-85 M5×10		1
6	Taper pin with internal screw		GB118-86 A5×25		1
7	Hexagon socket cap head screw		GB70-85 M8×16		1
8	Back plane of motor	DG400CNC-01-24		HT15-33	1
9	Hexagon socket set screw with flat point		GB77-85 M5×10		1
10	Hexagon socket cap head screw		GB70-85 M8×16		1
11	Taper pin with internal screw		GB118-86 A5×25		1
12	Tooth profile pulley	DG400CNC-02-39		45	1
13	Tooth profile pulley	DG400CNC-01-96		A3 45	1
14	Copper	DG400CNC-03-23		ZQSn6-6-3	1
15	Back plane of motor	DG400CNC-03-25		Ht15-33	1
16	Slotted set screw with cone point		GB71-8 5 M4×6		1

Fig. 6

Carriage

NO.	NAME	PART NO.	SPECIFICATIONS	MATERIAL	QUANTITY
17	Hexagon socket cap head screw		GB70-85 M5×10		2
18	Shell	DG400CNC-03-28		A3	1
19	Felt seal	DG400CNC-03-33		毛毡 felt	1
20	Under carriage	DG400CNC-E-03-17		HT20-40	1
21	Hexagon socket cap head screw		GB70-85 M5×10		2
22	Shell	DG400CNC-03-29		A3	1
23	Felt seal	DG400CNC-03-33		毛毡 felt	1
24	Hexagon socket set screw with cone point		GB78-85 M8×40		2
25	Hexagon nut		GB6170-86 M8		2
26	Taper pin with internal screw		GB118-86 A5×20		2
27	Hexagon nut		GB6170-86 M8		1
28	Plain washer		GB97.2-85-140HV Φ8		1
29	Special bearing		SQ8S		1
30	Hexagon nut		GB6170-86 M8		1
31	Compressed spring	DG400CNC-E-03-41		65Mn	1
32	Dial nut	DG400CNC-E-03-42		45	1

Fig. 6

Carriage

NO.	NAME	PART NO.	SPECIFICATIONS	MATERIAL	QUANTITY
33	Press piece	DG400CNC-E-03-40		45	1
34	Compressed spring	DG400CNC-E-03-43		65Mn	1
35	Copper sleeve	DG400CNC-E-03-44		ZQSn6-6-3	1
36	Hexagon socket cap head screw		Gb70-85 M6×16		2
37	Special bearing		SABJK12S		1
38	Frame	DG400CNC-E-03-27		HT15-33	1
39	Taper pin with internal screw		GB118-86 A5×20		2
40	Long sleeve knob	DG400CNC –01-21		phenolic	1
41	Handle lever	DG400CNC-03-30		45	1
42	Locking handle seat	DG400CNC –03-22		45	1
43	Hexagon socket cap head screw		GB70-85 M8×16		2
44	Screw seat	DG400CNC-E-03-20		A3	1
45	Hexagon socket cap head screw		GB70-85 M5×25		2
46	Dial	DG400CNC-E-01-17		45	2
47	Dial location screw	DG400CNC-E-01-124		45	1
48	Handle wheel	DG400CNC-E-01-19		HT15-33	1

Fig. 6

Carriage

NO.	NAME	PART NO.	SPECIFICATIONS	MATERIAL	QUANTITY
49	Handle	DG400CNC-01-20		45	1
50	Nut	DG400CNC-03-26		45	1
51	Hexagon socket set screw with flat point		GB77-85 M10×10		1
52	Thrust ball bearing		GB301-84 8101		1
53	Screw seat	DG400CNC-E-03-01		Ht15-33	1
54	Taper pin with internal screw		GB118-86 A5×20		2
55	Thrust ball bearing		GB301-84 8101		1
56	Hexagon socket cap head screw		GB70-85 M8×16		2
57	Cross feed screw	DG400CNC-E-03-04	Y40Mn		1
58	Plain parallel key		GB1096-79 4×10		1
59	Copper sleeve	DG400CNC-E-03-44		ZQSn6-6-3	1
60	Compressed spring	DG400CNC-E-03-43		65Mn	1
61	Dial nut	DG400CNC-E-03-42		45	1
62	Screw stem	DG400CNC-E-03-39		45	1
63	Compressed spring	DG400CNC-E-03-41		65Mn	1
64	Press piece	DG400CNC-E-03-40		45	1

Fig. 6

Carriage

NO.	NAME	PART NO.	SPECIFICATIONS	MATERIAL	QUANTITY
65	Nut	DG400CNC-E-03-21		ZQSn6-6-3	1
66	Compressed spring	DG400CNC-E-03-38		65Mn	1
67	Nut	DG400CNC-E-03-21		ZQSn6-6-3	1
68	Copper nut	DG400CNC-E-03-13		ZQSn6-6-3	1
69	Felt seal	DG400CNC-E-03-33		felt	1
70	Shell	DG400CNC-E-03-28		A3	1
71	Compressed spring	DG400CNC-E-03-37		65Mn	1
72	Hexagon socket cap head screw		GB70-85 M5×10		2
73	Copper nut	DG400CNC-E-03-13		ZQSn6-6-3	1
74	Plain washer		GB97.2-85-140HV Φ12		1
75	Hexagon nut		GB6170-86 M12		1
76	Chock	DG400CNC-03-18		45	1
77	Chock	DG400CNC-03-14		45	1
78	Oil cup		GB1155-79 6		1
79	Shell	DG400CNC-03-29		A3	1
80	Long sleeve knob	DG400CNC –01-21		phenolic	1

Fig. 6

Carriage

NO.	NAME	PART NO.	SPECIFICATIONS	MATERIAL	QUANTITY
81	Hexagon socket cap head screw		GB70-85 M5×10		2
82	Handle lever	DG400CNC-03-30		45	1
83	Hexagon nut		GB6170-86 M8		2
84	Hexagon socket set screw with cone point		GB78-85 M8×30		2
85	Pressure screw	DG400CNC-03-15		45	1
86	Hexagon head bolt		GB37-88 M10×35		2
87	Plain washer		GB97.2-85-140HV ϕ 10		2
88	Hexagon nut		GB6170-85 M10		2
89	Nut seat	DG400CNC-E-03-12		A3	1
90	Taper pin with internal screw		GB118-86 A5×20		2
91	Hexagon socket cap head screw		GB70-85 M6×16		2
92	Hexagon socket cap head screw		GB70-85 M5×16		2
93	Middle carriage	DG400CNC-E-03-05		HT20-40	1
94	Felt seal	DG400CNC –03-33		felt	1
95	Upper carriage	DG400CNC-E-03-03		HT20-40	1
96	Oil cup		GB1155-79 6		2

Fig. 6

Carriage

NO.	NAME	PART NO.	SPECIFICATIONS	MATERIAL	QUANTITY
97	Oil cup		GB1155-79 6		1
98	Hexagon socket set screw with flat point		GB77-85 M5×10		1

Fig.7

Tool post

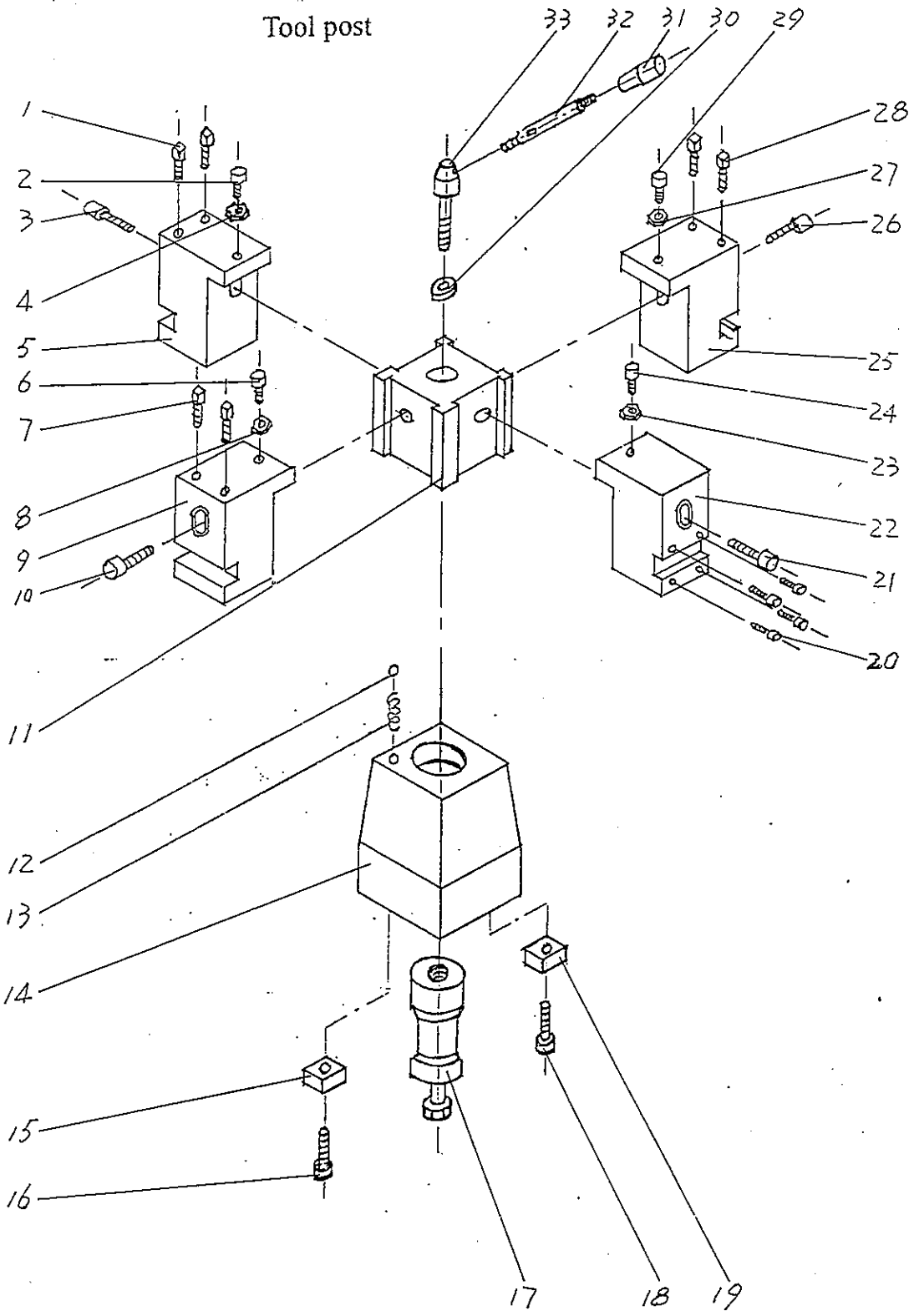

Fig.7

Tool post

NO.	NAME	PART NO.	SPECIFICATIONS	MATERIAL	QUANTITY
1	Square head screw		GB85-88 M8×50		2
2	Hexagon socket cap head screw		GB70-85 M5×20		1
3	Hexagon socket cap head screw		GB70-85 M10×40		1
4	Hexagon nut		GB6170-86 M5		1
5	Square tool post	DG400CNC-E-03-34		45	1
6	Hexagon socket cap head screw		GB70-85 M5×20		1
7	Square head screw		GB85-88 M8×50		1
8	Hexagon nut		GB6170-86 M5		1
9	Square tool psot	DG400CNC-E-03-34		45	1
10	Hexagon socket cap head screw		GB70-85 M10×40		1
11	Tool post	DG400CNC-E-03-08		45	1
12	Steel boll		GB308-84 ϕ10		1
13	Spring	DG400CNC-E-03-07		65Mn	1
14	Tool post seat	DG400CNC-E-03-06		HT15-33	1
15	Square key	DG400CNC-E-03-31		45	1
16	Hexagon socket cap head screw		GB70-85 M6×16		1

Fig.7

Tool post

NO.	NAME	PART NO.	SPECIFICATIONS	MATERIAL	QUANTITY
17	Locking bolt	DG400CNC-03-11		45	1
18	Hexagon socket cap head screw		GB70-85 M6×16		1
19	Square key	DG400CNC-03-31		45	1
20	Screw		GB67-85 M5×10		4
21	Hexagon socket cap head screw		GB70-85 M10×40		1
22	Tool post	DG400CNC-E-03-35		45	1
23	Hexagon nut		GB6170-86 M5		1
24	Hexagon socket cap head screw		GB70-85 M5×20		1
25	V-shape tool post	DG400CNC-E-03-36		45	1
26	Hexagon socket cap head screw		GB70-85 M10×40		1
27	Hexagon nut		GB6170-86 M5		1
28	Square head screw		GB85-88 M8×50		1
29	Hexagon socket cap head screw		GB70-85 M5×20		1
30	Washer	DG400CNC-03-10		45	1
31	Long sleeve knob	DG400CNC-01-26			1
32	Handle lever	DG400CNC-01-27		45	1

Fig.7

Tool post

NO.	NAME	PART NO.	SPECIFICATIONS	MATERIAL	QUANTITY
33	Handle bed	DG400CNC-E-03-09		45	1

Fig.8

Follow rest

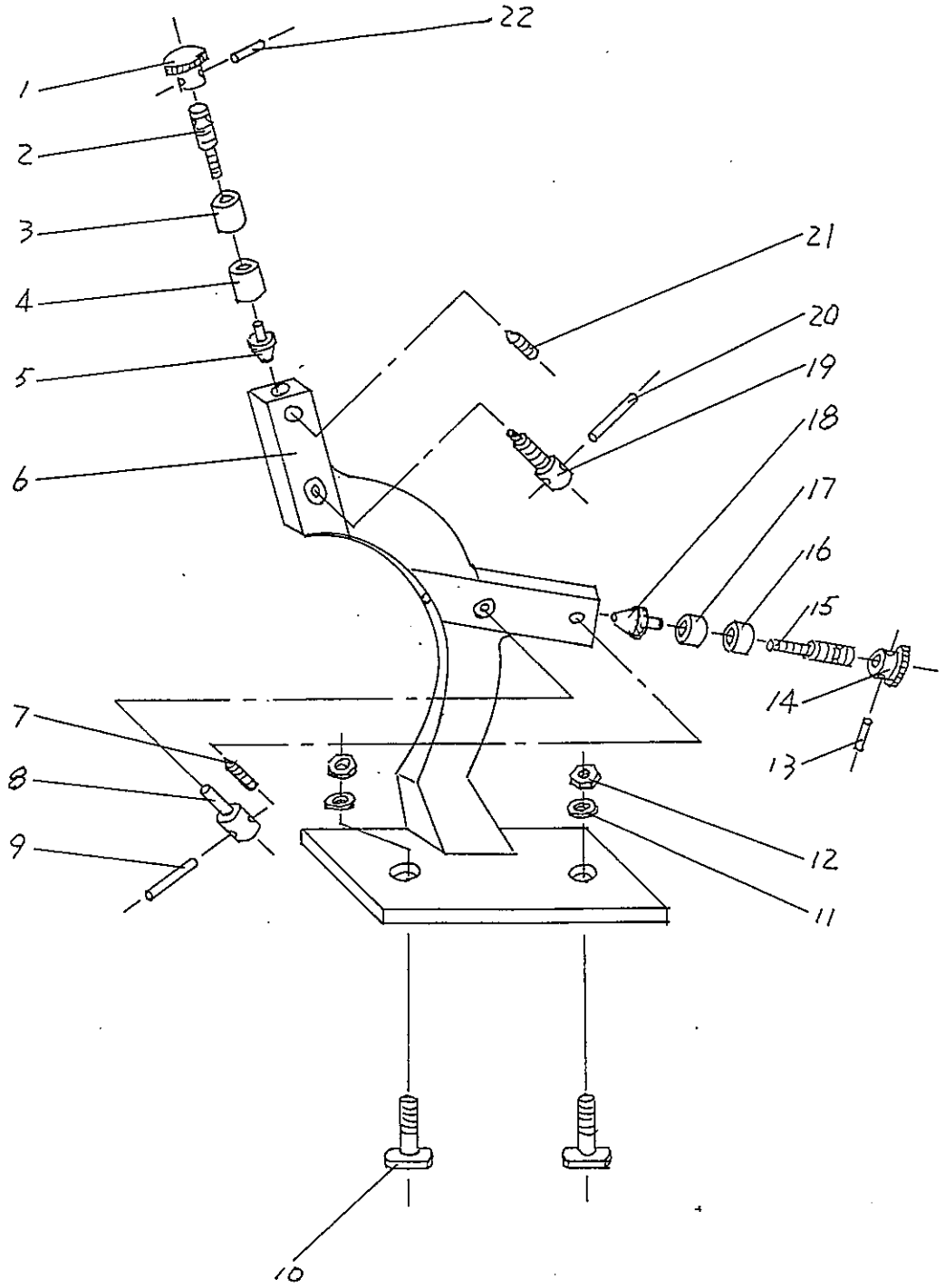

Fig.8

Follow rest

NO.	NAME	PART NO.	SPECIFICATIONS	MATERIAL	QUANTITY
1	Round nut	DG400CNC-B-05-22/12		45	1
2	Screw	DG400CNC-B-05-22/11		45	1
3	Nut	DG400CNC-B-05-22/10		45	1
4	Guide screw	DG400CNC-B-05-22/9		45	1
5	Stuff rod	DG400CNC-B-05-22/8		ZQSn10-1	1
6	Tool post base	DG400CNC-E-05-22		HT20-40	1
7	Hexagon socket set screw with cone point		GB78-85 M5×8		1
8	Guide screw	DG400CNC-B-05-22/4		45	1
9	Parallel pin		GB119-86 B6×40		1
10	Hexagon head bolt		GB37-88 M12×45		2
11	Plain washer		GB97.2-85 -140HV ϕ12		2
12	Hexagon nut		GB6170-86 M12		2
13	Parallel pin		GB119-86 B4×22		1
14	Round nut	DG400CNC-B-05-22/12		45	1
15	Screw	DG400CNC-B-05-22/11		45	1
16	Nut	DG400CNC-B-05-22/10		45	1

Fig.8

Follow rest

NO.	NAME	PART NO.	SPECIFICATIONS	MATERIAL	QUANTITY
17	Guide rod	DG400CNC-B-05-22/9		45	1
18	Stuff rod	DG400CNC-B-05-22/8		ZQSn10-1	1
19	Guide screw	DG400CNC-B-05-22/4		45	1
20	Parallel pin		GB119-86 B6×40		1
21	Hexagon socket set screw with cone point		GB78-85 M5×8		1
22	Parallel pin		GB119-86 B4×22		1

Fig.9

Compound box

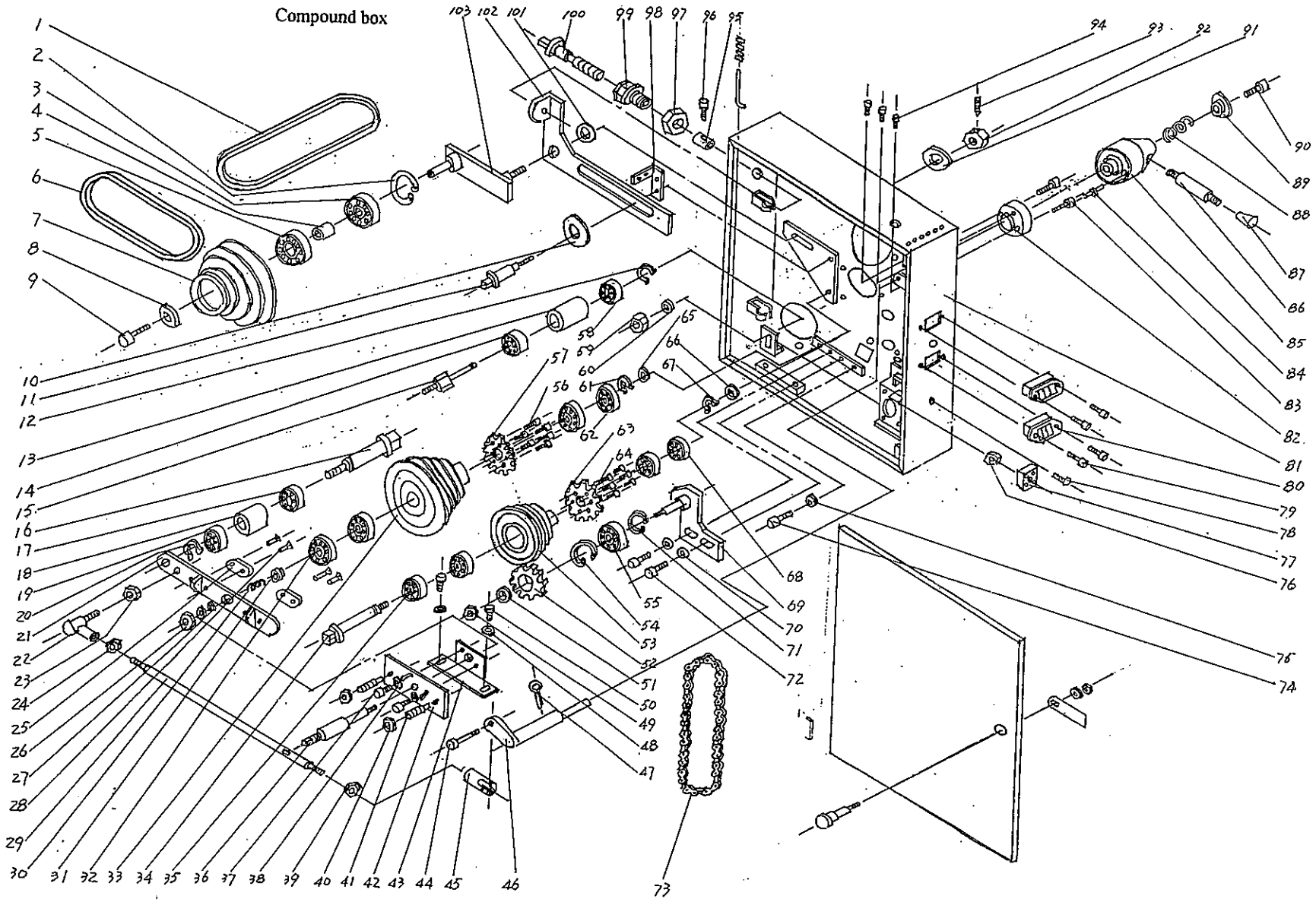

Fig.9

Compound box

NO.	NAME	PART NO.	SPECIFICATIONS	MATERIAL	QUANTITY
1	V-belt		GB1171-74 O-750		1
2	Circlip for hole		GB893.1-86 Φ42		1
3	Radial ball bearing		GB276-82 104		1
4	Sleeve	DG400CNC-01-08		A3	1
5	Radial ball bearing		GB276-82 104		1
6	V-belt		GB1171-74 O-630		1
7	Middle pulley	DG400CNC-02-22		HT15-33	1
8	Check ring	DG400CNC-E-01-09		A3	1
9	Hexagon socket cap head screw		GB70-85 M5×10		1
10	Washer	DG400CNC-E-01-145		A3	1
11	Positional screw	DG400CNC-E-01-146		45	1
12	External snap ring		GB894.1-86 Φ10		1
13	Small pulley	DG400CNC-E-01-164		45	1
14	Radial ball bearing		GB276-82 61800		1
15	Small pulley shaft	DG400CNC-E-01-163		45	1
16	Compressed shaft	DG400CNC-E-01-156		45	1

Fig.9

Compound box

NO.	NAME	PART NO.	SPECIFICATIONS	MATERIAL	QUANTITY
17	Radial ball bearing		GB276-82 6001		1
18	Pressure roller	DG400CNC-E-01-158		45	1
19	Radial ball bearing		GB276-82 6001		1
20	External snap ring		GB894.1-86 Φ12		1
21	Brake board	DG400CNC-E-01-159		A3 45	1
22	Special bearing		SQ8S		1
23	Hexagon nut		GB6170-86 M8		1
24	Hexagon nut		GB6170-86 M8		1
25	Friction ring	DG400CNC-E-01-149			2
26	Lock nut	DG400CNC-E-01-166		45	1
27	Adjust nut	DG400CNC-E-01-157		A3	2
28	Slotted countersunk lead screw		GB68-85 M4×10		4
29	Link rod	DG400CNC-E-01-142		A3	1
30	Brake spring	DG400CNC-E-01-151		65Mn	1
31	Washer	DG400CNC-E-01-152		45	1
32	Radial ball bearing		Gb276-82 61901		2

Fig.9

Compound box

NO.	NAME	PART NO.	SPECIFICATIONS	MATERIAL	QUANTITY
33	Chang pulley	DG400CNC-E-01-153		HT15-33	1
34	Shaft	DG400CNC-E-01-148		45	1
35	Radial ball bearing		GB276-82 61901		2
36	Shaft	DG400CNC-E-01-150		45	1
37	Hexagon socket cap head screw		GB70-85 M8×12		2
38	Plain washer		GB97.2-85- 140HV φ8		2
39	Left-handed nut	DG400CNC-E-01-143		45	1
40	Hexagon nut		GBr6170-86 M8		2
41	Brake adjust screw	DG400CNC-E-01-154		45	2
42	Brake adjust plate	DG400CNC-E-01-165		A3	1
43	Brake frame	DG400CNC-E-01-155		A3	1
44	Pivot pin	DG400CNC-01-76		45	1
45	Mate piece	DG400CNC-E-01-130		45	1
46	Operating lever	DG400CNC-E-01-132		A3 45	1
47	Split pin		GB91-86 3×25		1
48	Plain washer		GB97.2-85- 140HV φ8		2

Fig.9

Compound box

NO.	NAME	PART NO.	SPECIFICATIONS	MATERIAL	QUANTITY
49	Hexagon nut		GB6170-86 M8		1
50	Hexagon socket cap head screw		Gb70-85 M8×15		2
51	Parallel pin		GB97.2-85-140HV ϕ8		1
52	Chain wheel	DG400CNC-E-01-172		45	1
53	Pulley	DG400CNC-E-01-147		HT15-33	1
54	Circlip for hole		GB893.1-86 ϕ32		1
55	Radial ball bearing		GB276-82 201		1
56	Hexagon socket cap head screw		GB70-85 M4×20		6
57	Chain wheel	DG400CNC-E-01-169		45	1
58	Radial ball bearing		GB276-85 61800		
59	Hexagon nut		GB6170-86 M8		1
60	Parallel pin		GB97.2-85-140HV ϕ8		1
61	External snap ring		GB894.1-86 ϕ12		1
62	Radial ball bearing		GB276-82 61901		2
63	Chain wheel	DG400CNC-E-01-169		45	1
64	Hexagon socket cap head screw		GB70-85 M4×20		6

Fig.9

Compound box

NO.	NAME	PART NO.	SPECIFICATIONS	MATERIAL	QUANTITY
65	Washer	DG400CNC-E-01-173		45	1
66	Washer	DG400CNC-E-01-173		45	1
67	External snap ring		GB894.1-86 Φ12		1
68	Rodial boll bearing		GB276-82 61901		2
69	Frame	DG400CNC-E-01-170		A3 45	1
70	Washer	DG400CNC-E-01-171		45	2
71	Cirelip for hole		GB893.1-86 Φ32		1
72	Hexagon socket cap head screw		GB70-85 M6×25		2
73	Roller chain		GB/T1243-1997 06B-1-48		1
74	Hexagon socket cap head screw		GB70-85 M6×16		1
75	Parallel pin		GB97.2- 85-140HV Φ6		
76	Hexagon nut		GB6170-86 M4		1
77	Cable pin		JX5-1002		1
78	Slotted pan head screw		GB67-85 M4×18		1
79	Slotted pan head screw		GB67-85 M5×10		4
80	Button switch		LAP-15/2		2

Fig.9

Compound box

NO.	NAME	PART NO.	SPECIFICATIONS	MATERIAL	QUANTITY
81	Box	DG400CNC-E-01-02		A3	1
82	Spacing block	DG400CNC-E-01-133		45	1
83	Hexagon socket cap head screw		GB70-85 M5×8		2
84	Location pin	DG400CNC-E-01-134		45	1
85	Fastener	DG400CNC-E-01-135		45	1
86	Handle lever	DG400CNC-01-27		45	1
87	Long sleeve knob	DG400CNC-01-26		Phenolic	1
88	Pressed spring	DG400CNC-E-01-136		65Mn	1
89	Spring cover	DG400CNC-E-01-137		45	1
90	Hexagon socket cap head screw		GB70-85 M5×12		1
91	Plain washer	DG400CNC-E-01-128		A3	1
92	Nut	DG400CNC-E-01-129		45	1
93	Hexagon socket set screw with cone point		GB78-85 M5×6		1
94	Hexagon socket cap head screw		GB70-85 M5×8		3
95	Location sleeve	DG400CNC-E-01-140		45	1
96	Hexagon socket cap head screw		GB70-85 M5×10		1

Fig.9

Compound box

NO.	NAME	PART NO.	SPECIFICATIONS	MATERIAL	QUANTITY
97	Hexagon nut		GB6170-86 M24×2		1
98	Bracket	DG400CNC-E-01-144		A3	1
99	Cover	DG400CNC-E-01-139		45	1
100	Adjust screw	DG400CNC-E-01-141		45	1
101	Washer	DG400CNC-E-01-127		A3	1
102	Adjust board	DG400CNC-E-01-126		A3	1
103	Rocker arm	DG400CNC-E-01-125		A3 45	1

Fig.10

Lathe head motor

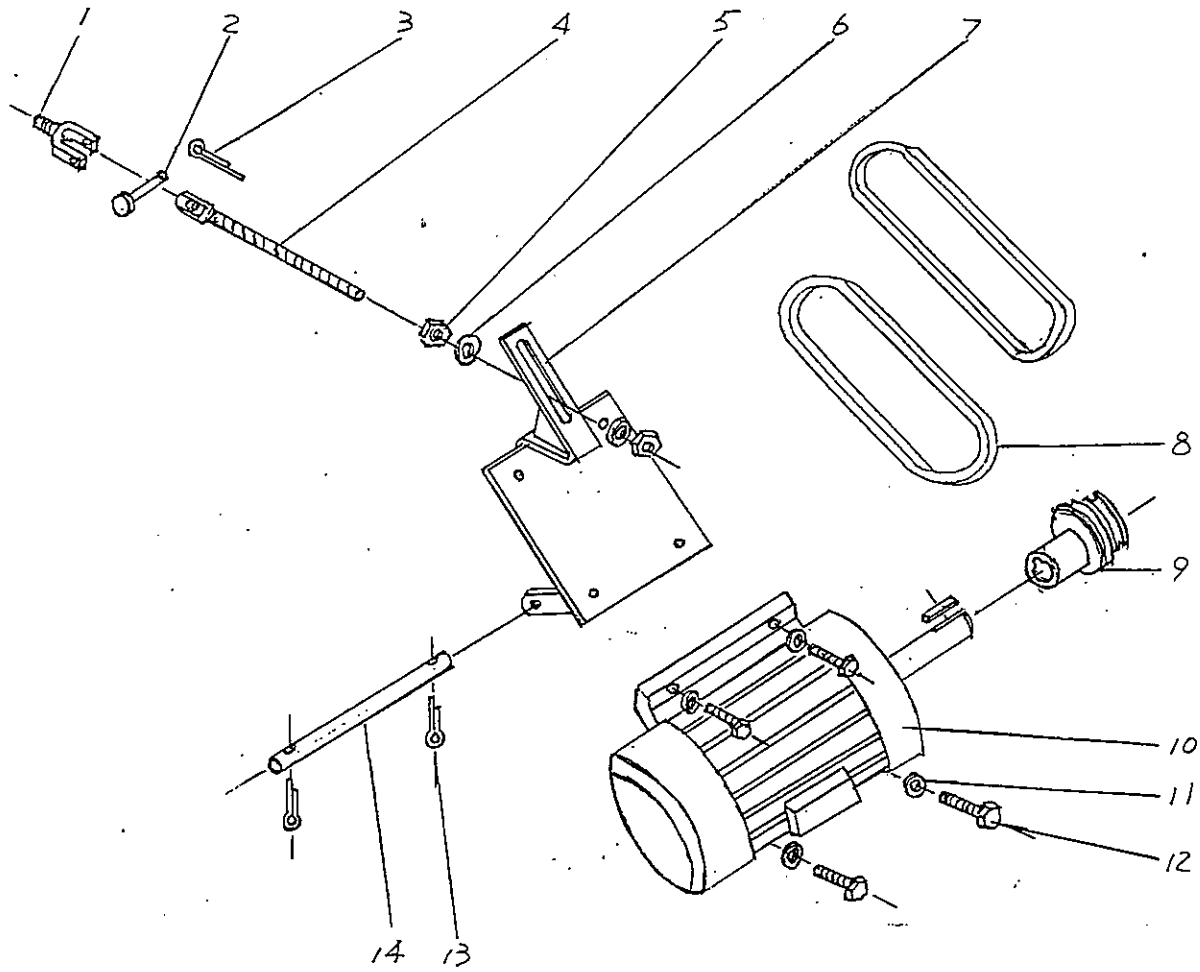

Fig.10

Lathe head motor

NO.	NAME	PART NO.	SPECIFICATIONS	MATERIAL	QUANTITY
1	Forked standard	DG400CNC-01-75		45	1
2	Pivot pin	DG400CNC-01-76		45	1
3	Split pin		GB91-86 3×25		1
4	Dog bole	DG400CNC-01-77		45	1
5	Hexagon nut		GB6170-86 M10		2
6	Plain washer		GB96-85 φ10		2
7	Back plane of motor	DG400CNC-01-78		A3	1
8	V-belt		GB1171-74 O-560		2
9	Motor pulley	DG400CNC-E-01-03		HT15-33	1
10	Motor		YL8014 750W 110V/60HZ		1
11	Plain washer		GB97.2-85 -140HV φ8		4
12	Hexagon head bolt		GB5783-86 M8×25		4
13	Split pin		GB91-86 3×30		2
14	Bearing shaft	DG400CNC-01-79		45	1

Fig.11

Attachments

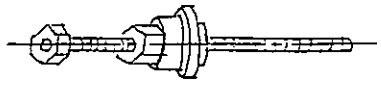
1

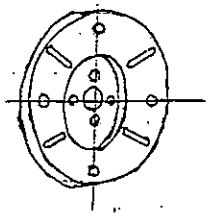
2

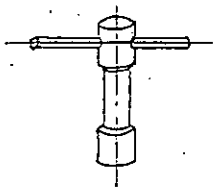
3

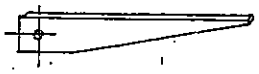
4

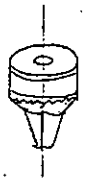
5

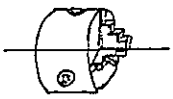
6

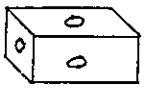
7

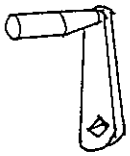
8


9

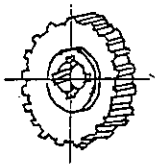
10

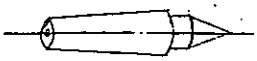
11


12

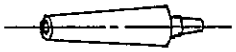
13

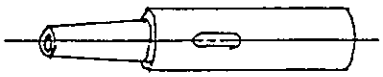
14

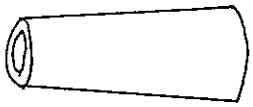
15

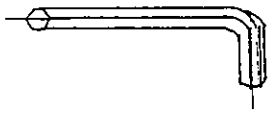
16

Fig. 11

Attachments

NO.	NAME	PART NO.	SPECIFICATIONS	MATERIAL	QUANTITY
1	Long drawbar	DG400CNC-D-01-114	3/8″ ×457(mm)		1
	Nut	DG400CNC-D-01-114/1		45	1
	Sleeve	DG400CNC-D-01-114/2		45	1
	Brace	DG400CNC-D-01-114/3		45	1
2	Chuck	DG400CNC-05-01		HT20-40	1
3	Tool wrench	DG400CNC-05-02			1
	Handle with sleeve	DG400CNC-05-02/1		45	1
	Wrench	DG400CNC-05-02/2		45	1
4	Drill key	DG400CNC-05-12		45	1
5	Drilling chuck		Φ1-13		1
6	3 Jaw chuck		K11130		1
7	Riser block	DG400CNC-E-05-24		45	4
8	Cranking bar	DG400CNC-E-05-21		45	1
	Handle with sleeve	DG400CNC-01-20		45	1
9	Short drawbar	DG400CNC-D-02-15	3/8″ ×300(mm)	A3	1
	Hexagon nut		GB6170-86 M10		2

Fig. 11

Attachments

NO.	NAME	PART NO.	SPECIFICATIONS	MATERIAL	QUANTITY
10	Hanging wheel	DG400CNC-05-04		A3	
			m=1 Z=27		1
			Z=30		1
			Z=32		1
			Z=33		1
			Z=36		1
			Z=39		1
			Z=40		1
			Z=42		1
			Z=48		1
			Z=49		1
			Z=50		1
			Z=51		1
			Z=54		1
			Z=56		1
			Z=57		1

Fig. 11

Attachments

NO.	NAME	PART NO.	SPECIFICATIONS	MATERIAL	QUANTITY
			Z=60		1
			Z=63		
11	Dead centers	DG400CNC-05-15	2#	T8	1
			3#	T8	1
			4#	T8	1
12	Extension	DG400CNC-05-03	2/3	45	1
13	Tapered stick	DG400CNC-02-17		45	1
14	Extension	DG400CNC-E-05-23	3/3	45	1
15	Sleeve		P32 4×3		1
16	Inside hex wrench		2.5mm		1
			3		1
			4		1
			5		1
			6		1
			8		1

Fig.12

Indicator

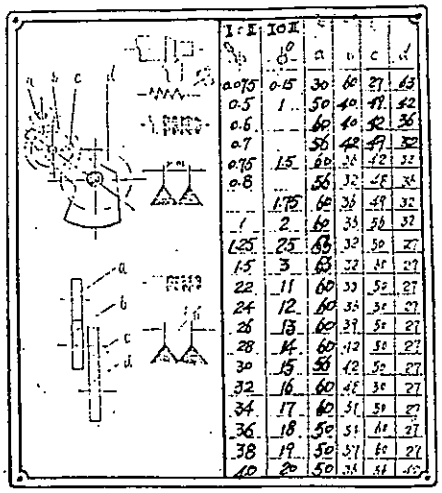

I:II	10II				
		a	b	c	d
0.075	0.15	30	60	27	63
0.5	1	50	40	49	42
0.6		60	40	52	36
0.7		56	42	49	32
0.75	1.5	60	36	42	32
0.8		56	32	48	36
	1.75	60	36	49	32
1	2	60	33	56	32
1.25	2.5	63	32	50	27
1.5	3	63	32	50	27
22	11	60	33	52	27
24	12	60	35	50	27
26	13	60	39	50	27
28	14	60	42	50	27
30	15	58	42	52	27
32	16	60	48	50	27
34	17	60	51	50	27
36	18	50	51	60	27
38	19	50	57	60	27
40	20	50	36	58	40

1

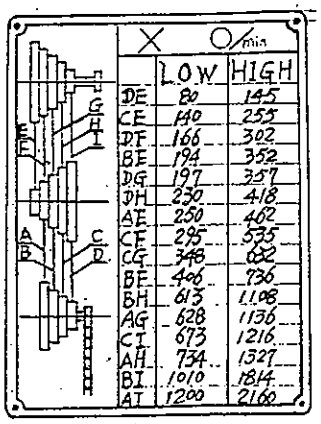

	LOW	HIGH
DE	80	145
CE	140	255
DF	166	302
BE	194	352
DG	197	357
DH	230	418
AE	250	462
CF	295	535
CG	348	632
BF	406	736
BH	613	1108
AG	628	1136
CI	673	1216
AH	734	1327
BI	1010	1814
AI	1200	2160

2

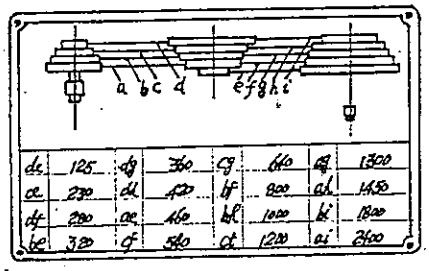

de	125	dg	360	eg	640	fg	1300
ce	230	cd	420	bf	800	ab	1450
df	280	ce	460	bd	1000	bi	1800
be	320	cf	540	ci	1200	ai	2600

3

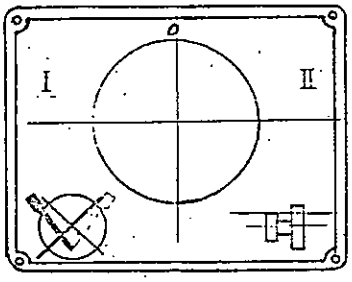

4

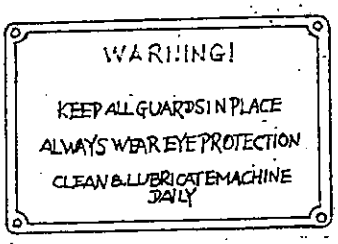

5

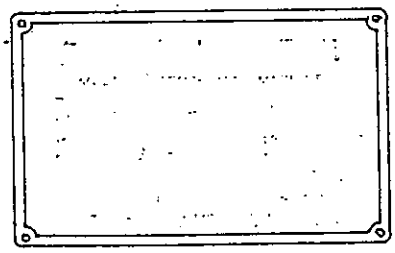

6

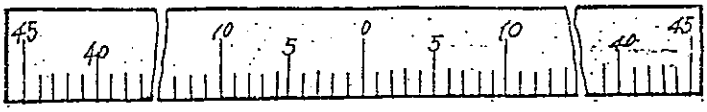

7

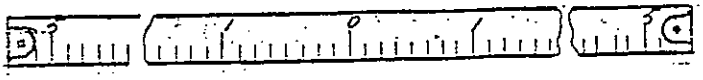

8

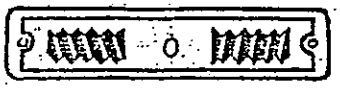

9

10

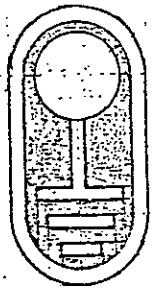

11

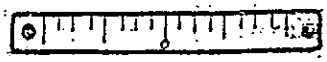

12

Fig.12

Indicator

NO.	NAME	PART NO.	SPECIFICATIONS	MATERIAL	QUANTITY
1	Feed screw indicator	DG400CNC-05-05A		aluminium	1
2	Spindle speed indicator	DG400CNC-05-11A		aluminium	1
3	Drilling-milling speed indicator	DG400CNC-05-10		aluminium	1
4	Spindle fast-slow speed indicator	DG400CNC-05-07		aluminium	1
5	Safety indicator	DG400CNC-05-19A		aluminium	1
6	Plate	DG400CNC-05-17A		aluminium	1
7	Angle indicator	DG400CNC-05-06A		aluminium	1
8	Dial indicator	DG400CNC-05-16		aluminium	1
9	Left-right screw indicator	DG400CNC-05-18A		aluminium	1
10	Indicator	DG400CNC-05-08A		aluminium	1
11	Grounding indicator	DG400CNC-05-20		aluminium	1
12	Tail-stock dial indicator	DG400CNC-05-09A		aluminium	1

Fig.13

The others

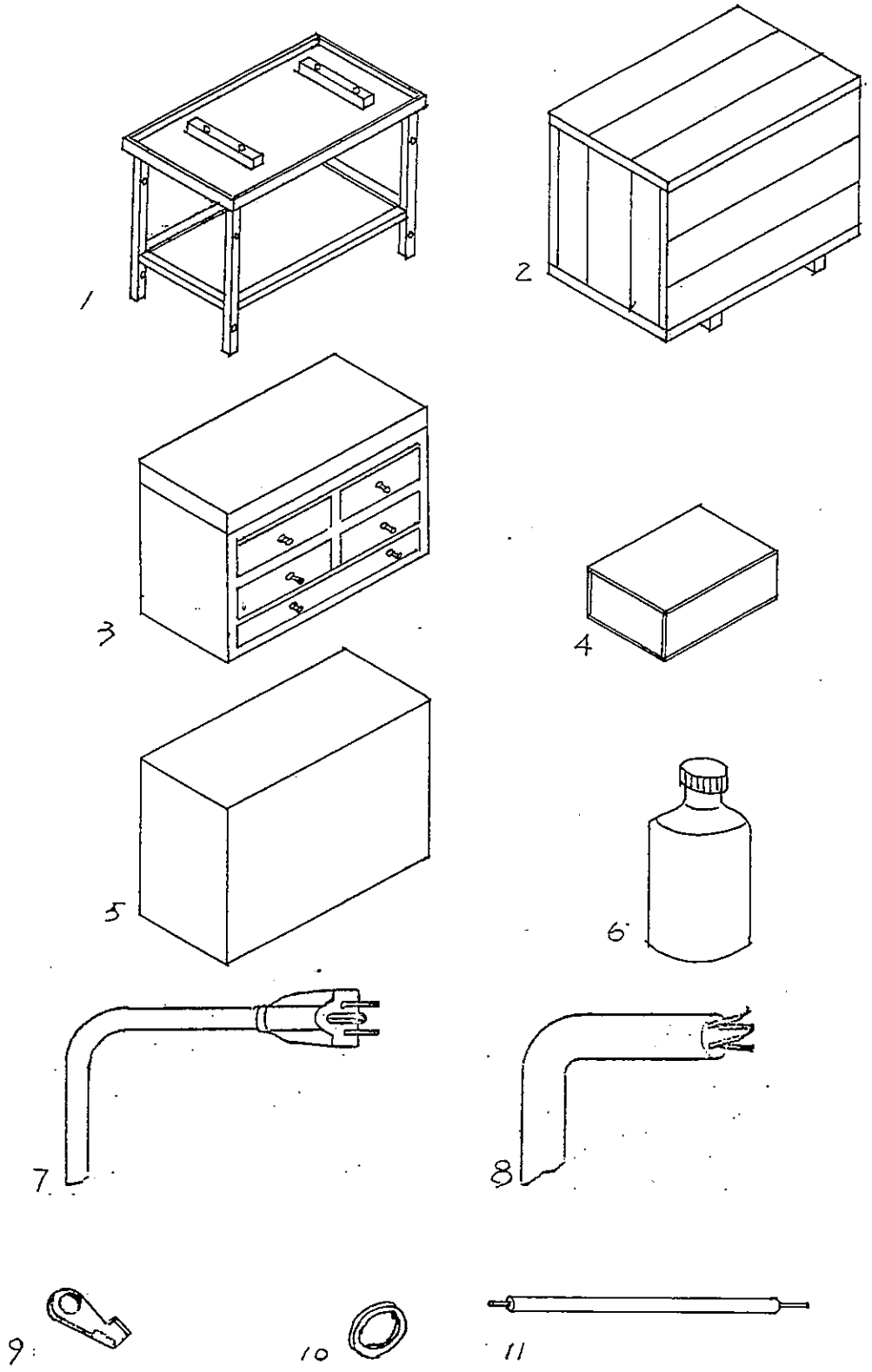

Fig.13

The others

NO.	NAME	PART NO.	SPECIFICATIONS	MATERIAL	QUANTITY
1	Bench	DG400CNC-E-06-00		A3	1
2	Container	DG400CNC-E-06-00		wood	1
3	Toolbox	DG400CNC-E-06-7		wood	1
4	Attachment box			wood	1
5	Paper box			paper	1
6	Paint		50ML		1
7	Plug cord		YY-3 1.6M		1
8	Rubber flexible wire		YZ-4×1MM^2 2.4M		1
9	Copper patch board		10A		8
10	Robber		Φ16		3
11	Copper core wire		BV-1.5MM^2 1.5M		